SPECIAL PACKAGING INSTRUCTION

CODE ID	SPI NO (TPO)
98748	F 00-012-7150
	SHEET 1 OF 4

PART OR DRAWING NO.	NATIONAL STOCK NO.	CURR REV
6002T47P01	2840-00-012-7150 OK	B

ITEM NOMENCLATURE
FLAMEHOLDER

ORIG DATE 63059

ILL P. BROWNING
PS T.C. JONES
CHK H. HOLINSWORTH
AUTH C. TROTTER

PRESERVATION IAW MIL-STD-2073

SERVICEABLE METHOD: 10
UNSERVICEABLE METHOD: 10

QUP 001
ICQ N/A

CLEANING & DRYING IAW MIL-STD-2073
PRESERVATIVE N/A
MARKING IAW MIL-STD-129

SPECIAL MARKINGS:
A) SPI NO. F 00-012-7150
B) REUSABLE CONTAINER AND DUNNAGE DO NOT DESTROY.
C) NOT FOR OUTSIDE STORAGE.

CLOSURE

LEVEL A: N/A
LEVEL B: IAW ASTM-D-1974

PACKING AS SPECIFIED BELOW AND BILL OF MATERIALS

LEVEL	SPEC	STYLE	TYPE	CL	VRTY	GR	TR
A	N/A	N/A	N/A	N/A	N/A	N/A	N/A
B	ASTM-D-5118	RSC	CF	WR	SW	W5C	N/A

	LEVEL A	LEVEL B
GROSS CU FT	N/A	1.629
GROSS WT LBS	N/A	7
DESIGN FRAGILITY G	N/A	N/A

CNTNR I.D.	LENGTH	WIDTH	DEPTH
LEVEL A:	N/A	N/A	N/A
LEVEL B:	16	16	9 3/4

CNTNR O.D.	LENGTH	WIDTH	DEPTH
LEVEL A:	N/A	N/A	N/A
LEVEL B:	16 3/8	16 3/8	10 1/2
ITEM DIM	13 1/4	13 1/4	8
ITEM WT LBS.	3 LBS.		

REVISIONS		
LTR	DESCRIPTION	DATE
	NEW	63059
A	SUPERCEDES PREVIOUS DRAWING	88229
B	UPDATE SPEC'S. & DELETE ALT PACK	12179

PART NO.	QTY.	NOMENCLATURE OR DESCRIPTION	SIZE (INCHES UNLESS SPECIFIED) TOLERANCES ON FRAC. ± 1/8, DECIMAL ± .10, ANGLES ± 1°.	MATERIAL SPECIFICATION
5	1	TOP PAD	15 7/8 X 15 7/8 X 5/16	ASTM-D-4727, WR, DW
4	1	STABILIZER	14 11/16 X 8 3/8 X 5/16	ASTM-D-4727, WR, DW DETAIL "2"
3	1	WRAP	45 X 23	A-A-3174
2	1	BASE INSERT	15 7/8 X 15 7/8 X 5/8	ASTM-D-4727, WR DETAIL "1"
1	1	CONTAINER I.D.	16 X 16 X 9 3/4	SEE LEVEL OF PACK

SPI NO. F 00-012-7150

SPECIAL PACKAGING INSTRUCTION	CODE ID 98748	SPI NO (TPO) F 00-012-7150
ITEM NOMENCLATURE FLAMEHOLDER		SHEET 2 OF 4

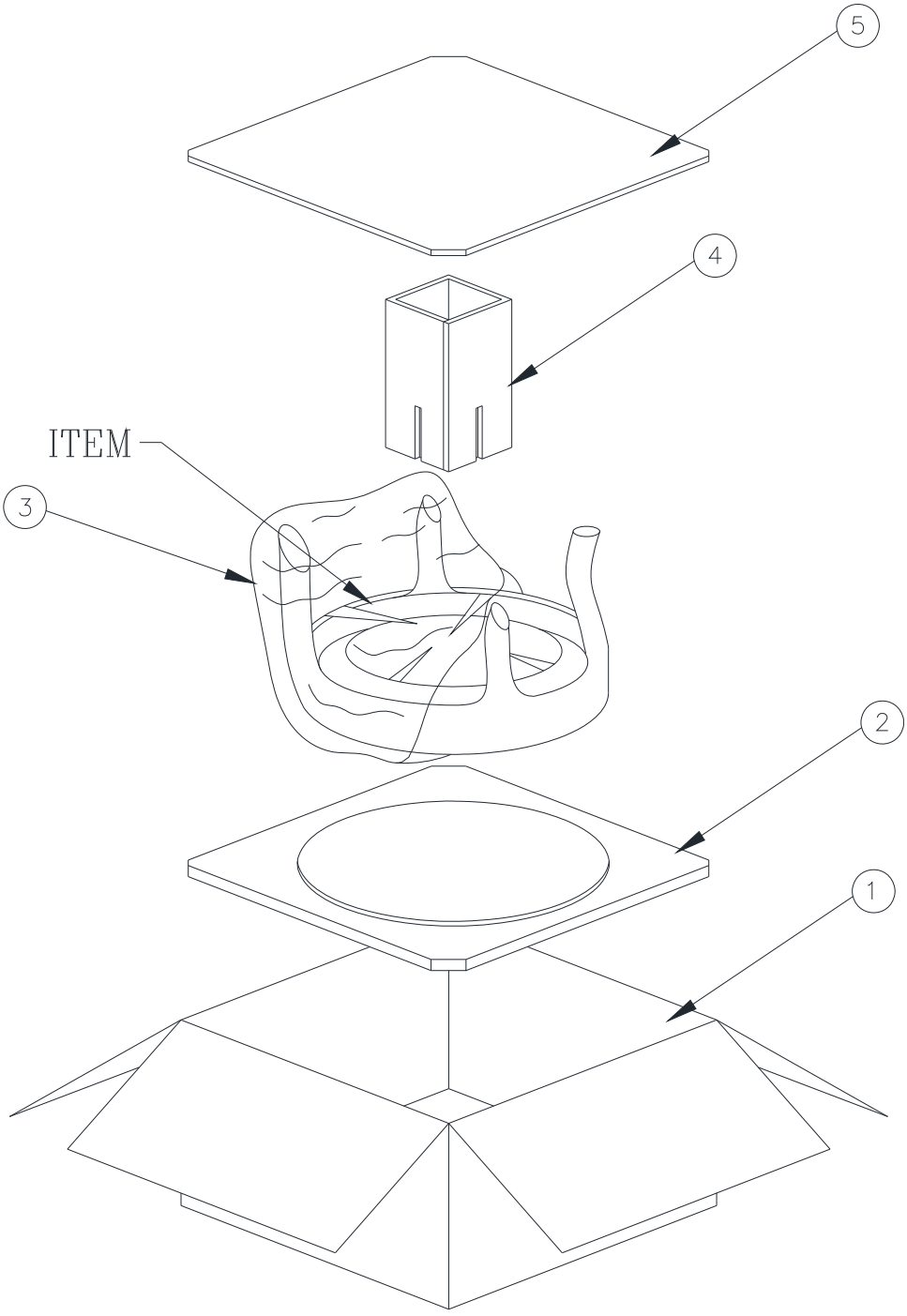

SPECIAL PACKAGING INSTRUCTION	CODE ID 98748	SPI NO (TPO) F 00-012-7150
ITEM NOMENCLATURE FLAMEHOLDER		SHEET 3 OF 4

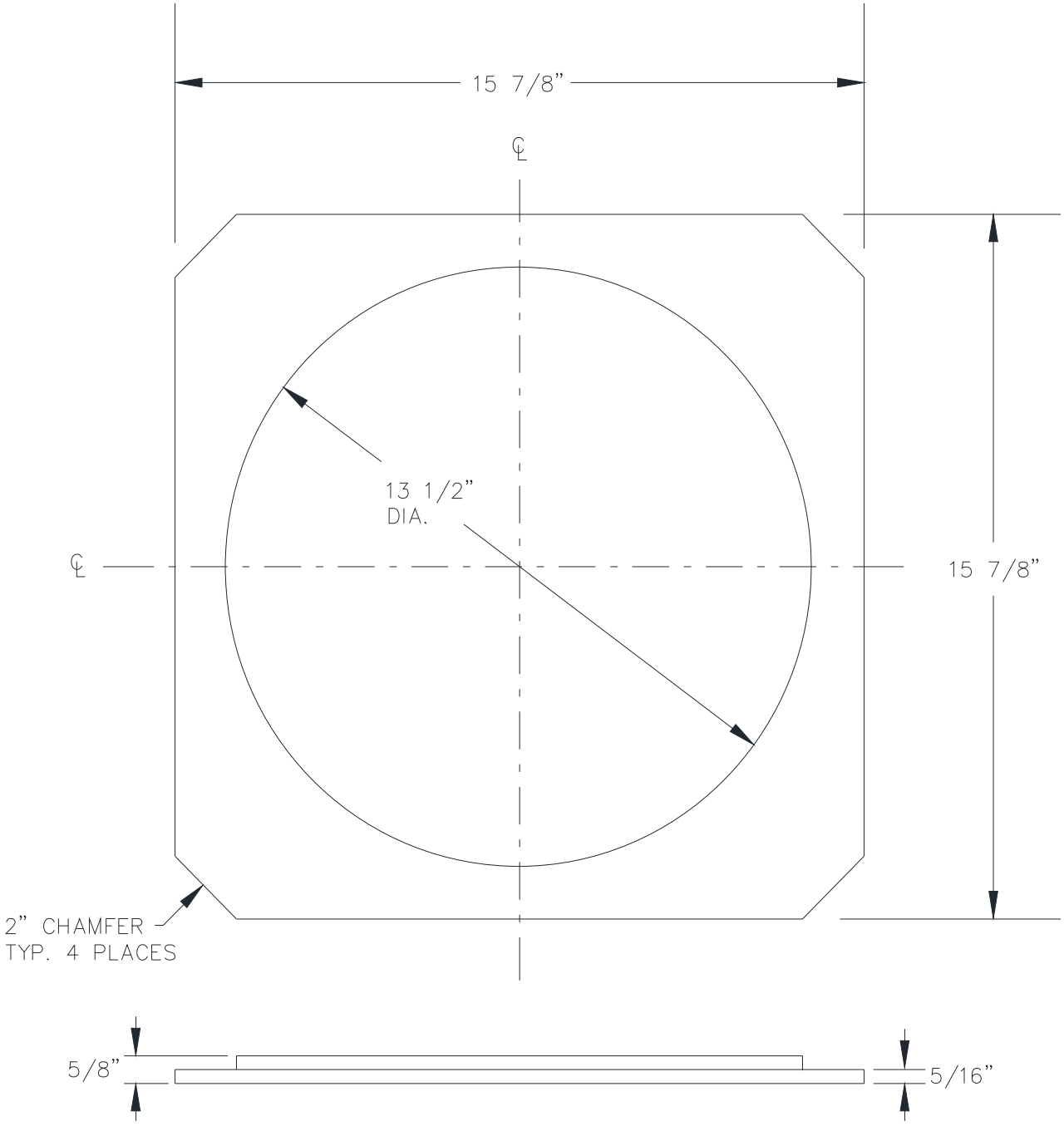

DETAIL "1" (2)

DD form 2169 MOD MAR 87

COMPUTER GENERATED

SPECIAL PACKAGING INSTRUCTION	CODE ID 98748	SPI NO (TPO) F 00-012-7150
ITEM NOMENCLATURE FLAMEHOLDER		SHEET 4 OF 4

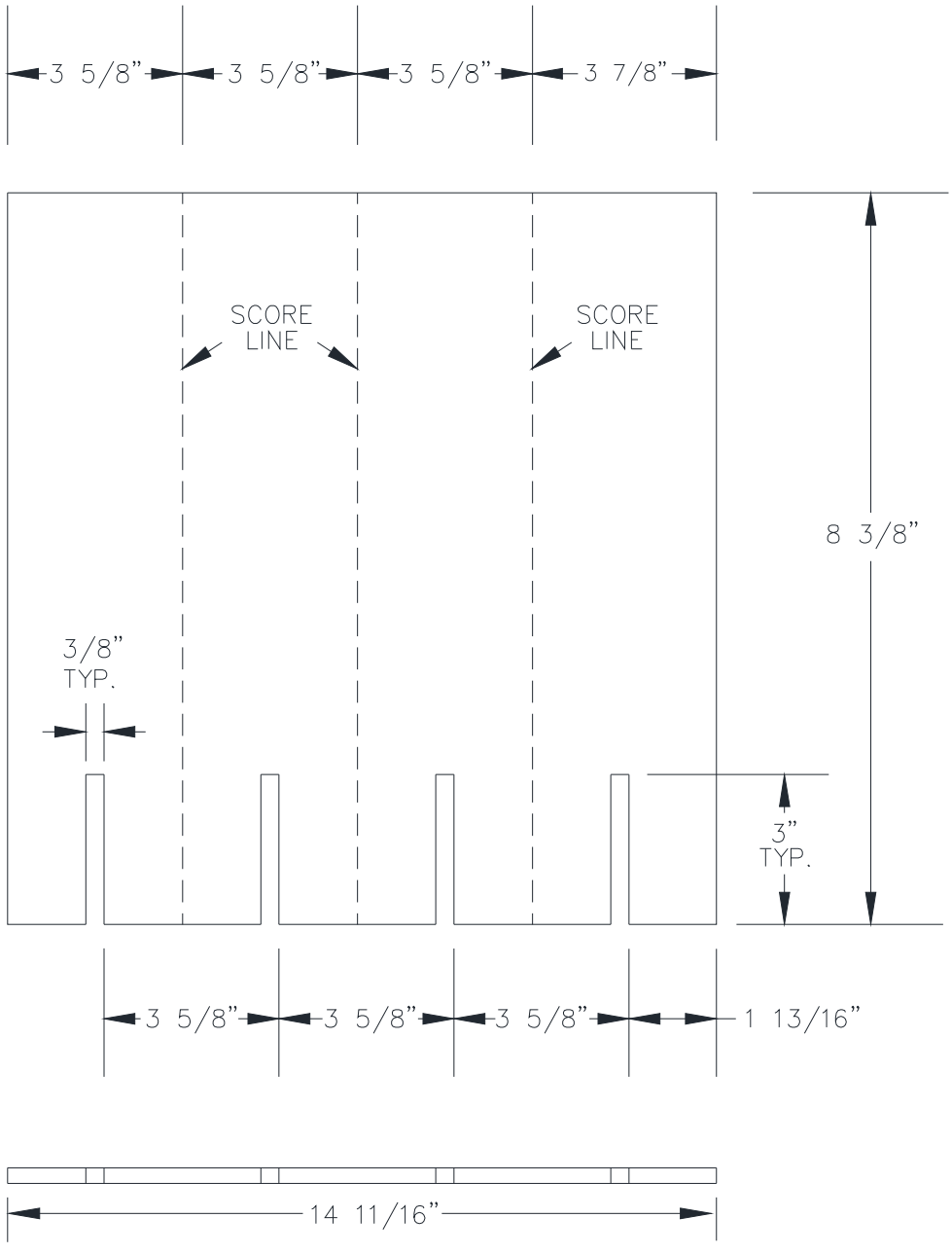

DETAIL "2" (4)