Pixel 10 Pro XL Recycling Guide



Version 1.0

Who is this Guide for?

This guide is intended for professional recyclers who are trained in electronics recycling and understand the risks involved with doing so. This recycling guide is not intended in any way to serve as repair instructions.

Please follow all relevant local, state federal regulations and applicable international standards for electronic recycling as you follow this guide.

Environmental sustainability at Google

At Google, operating in an environmentally sustainable way has been a core value from our beginning.

As our business has evolved to include the manufacturing of electronic products, we've continually expanded our efforts to improve each product's environmental performance and minimize Google's impact on the world around us.

This report details how recyclers can disassemble the Pixel 10 Pro XL to recover raw materials.

To provide feedback or for questions about this guide, please email Recycling@Google.com.

Table of Contents

Topic	Location
Components Requiring Selective Treatment	Slide 4
General Personal & Environmental Safety	Slide 5
Battery Safety	Slide 6
Expanded View of Device	Slide 8
Location of Battery	Slide 9
Screw Map	Slide 10
Material Constituents of Device	Slide 11
Recommended Tools	Slide 12
Processing Steps	Slides 13 - 29
Frequently Asked Questions	Slide 30

Directive 2012/19/EU Annex VII Components Requiring Selective Treatment

The Google Pixel smartphone contains the following materials and components as listed in Annex VII in the European Union WEEE (recast) Directive 2012/19/EU.

Substance or Component	Location	Removal Instructions
Display & Cover Glass Cover glass and organic light-emitting diode (OLED) display if the surface is greater than 100 cm^2	**Main Display**	**Step 12**
PCB Printed circuit board if the surface area is greater than 10 cm^2	**Main Logic Board** This device employs a mid-frame architecture. MLB is located within the device enclosure and can be accessed through the back cover.	**Step 10**
PCB Printed circuit board if the surface area is greater than 10 cm^2	**OLED FPC** Organic light-emitting diode flexible printed circuit	**Step 12**
Battery	**Battery** Battery is located within the device enclosure and can be accessed through the back cover.	**Step 7**
Charger External electric cables	**Charge Cable** External charging cable is removable.	**Step 1**

Personal Safety

Operators should always wear personal protective equipment (PPE) including protection from thermal events, fires and hazardous materials.

- Hand protection
- Protective Clothing
- Eye protection
- Burn Protection
- Breathing protection
- HazMat Protection

Environmental Health & Safety

Operate in a safe, well-ventilated environment. Follow safety and ergonomic best practices. Outfit your workspace with fire and hazardous material mitigation equipment.[1]

- Ergonomics
- Fire Equipment
- Ventilation
- HazMat Equipment
- Training

⚠ Always remember to ensure strict compliance with all local applicable health and safety rules.

Battery Safety

Improper disassembly can be dangerous—especially if individuals are unfamiliar with safety critical components, such as lithium ion batteries.

Discharge Battery



Do not inhale hazardous fumes



Do not damage battery



Be fully prepared for thermal runaway





Other Battery Handling Tips

Battery must be carefully handled, and can be dangerous when damaged.

- Fully discharge device battery before attempting disassembly.
- Never bend, dent or puncture battery.
- Do not use tools that may accidentally damage battery.
- Store batteries in a safe environment to prevent inadvertent damage.
- Take care not to store large quantities of batteries together.
- Take care to prevent shorting of battery terminals.
- If a battery begins to vent or a thermal runaway occurs, immediately cover in sand or use gloves and tongs to place battery in a fire safe.

Battery Transport and Storage Safety

Follow regulations and best practices for lithium-ion battery safety.

Here are some resources that may help recyclers.

Topic	Resource
Damaged, Defective or Recalled (DDR) lithium cell batteries Learn how to identify a lithium cell battery that may be swollen, damaged, defective or recalled. Follow all Department of Transportation guidelines. This QR code links to a PDF file from the United States Department of Transportation entitled “Understanding the Risks of Damaged, Defective or Recalled (DDR) Lithium Batteries”	Link
Transporting Lithium Batteries This QR code links to a webpage from the United States Department of Transportation entitled “Transporting Lithium Batteries”	Link

Device Specific Warnings

⚠ Caution

Pixel 10 Pro contains a class 1 laser module

The design of the device incorporates optics and protective housing such that there’s no access to a level of laser radiation above class 1 during normal use or approved servicing.

Use of controls or adjustments or performance of procedures other than those specified herein may result in hazardous radiation exposure.

Google

Pixel 10 Pro XL: Expanded view

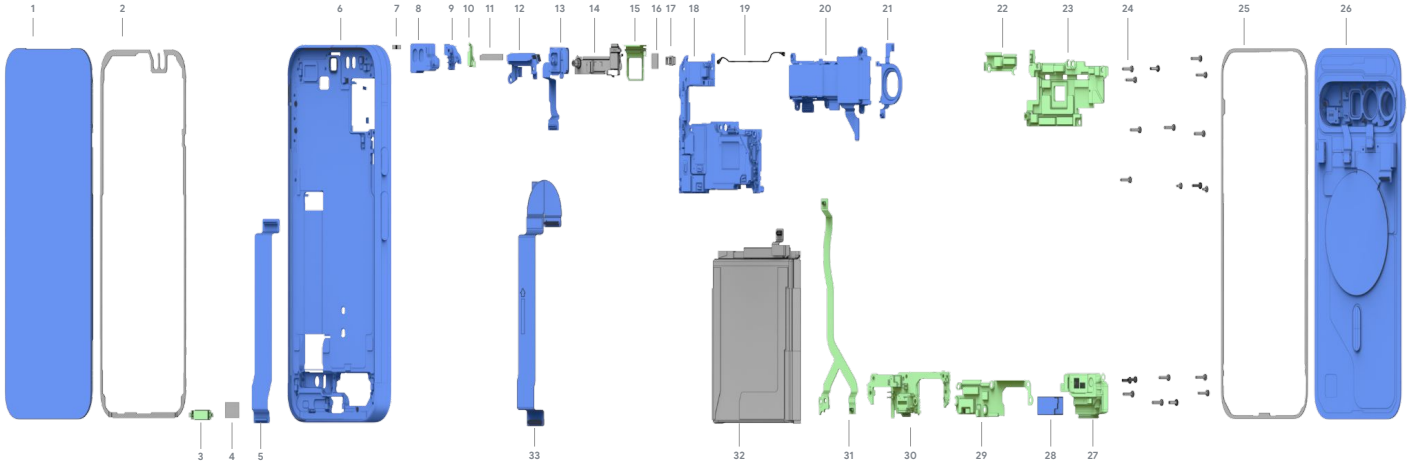

Part ID

1	Display module	8	Top speaker	15	SIM tray	22	BG cowling	29	CLB cowling
2	Display adhesive	9	ANT4 board	16	Thermal TIM	23	MLB cowling	30	Chin board
3	Display cowling	10	ANT4 cowling	17	P-sensor foam	24	Screw	31	RJ flex
4	DJ flex PSA	11	Thermal pad_mmWave	18	Logic board	25	BG adhesive	32	Battery
5	DJ flex	12	mmWave module	19	Coaxial cable	26	BG sub	33	CJ flex
6	Enclosure	13	FCAM	20	RCAM	27	Bottom speaker		
7	Top speaker FoF	14	FCAM cowling	21	SPAM flex	28	Vibrator		

Battery Location

There is one lithium-ion cobalt battery located in this device.

The approximate location of the battery is outlined.



Screw map

These are the screws used in the Pixel 10 Pro XL:

Screw G250-07839-04	Screw G250-07891-04	Screw G250-08169-03	Screw G250-07839-03	Screw G250-08246-05
				

- Not hidden

- Hidden

Note

This is what the device looks like once the back cover is removed.



What materials can be found in this device?

MATERIALS USED IN PIXEL 10 PRO XL

TOTAL MATERIALS: 232 g

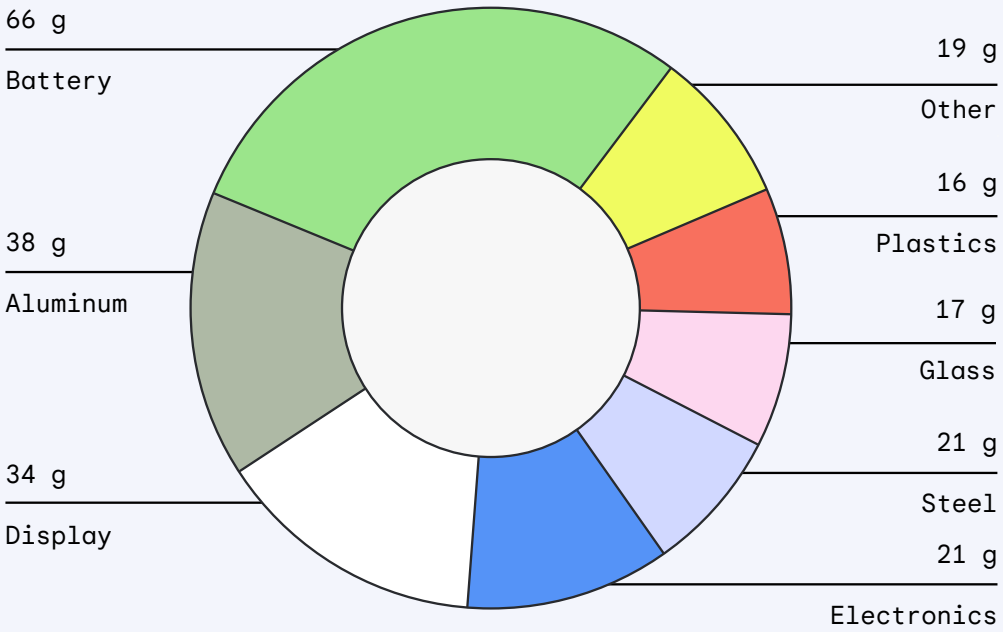

What Tools Are Recommended to Disassemble This Device?

Flat Head Screwdriver



Prying Implement

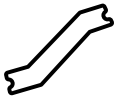

Pliers



99.9% Isopropyl Alcohol



Torx IP 3 Driver



Universal disassembly shim or miniature pry tool

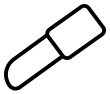

SIM Card Tray Ejector Pin



Heat Gun, Heat Pad or Heating Tools



01

Remove Charge Cable

Turn off device. Unplug Charge cable and allow the device to drain battery charge.

Target Recyclable Materials:

- Copper in Cable



02

Remove SIM Tray

Use Small Push Pin Ejector.

Aluminum and plastic SIM Tray	Gold coating on SIM Card
	

Note: applicable on physical SIM SKU only

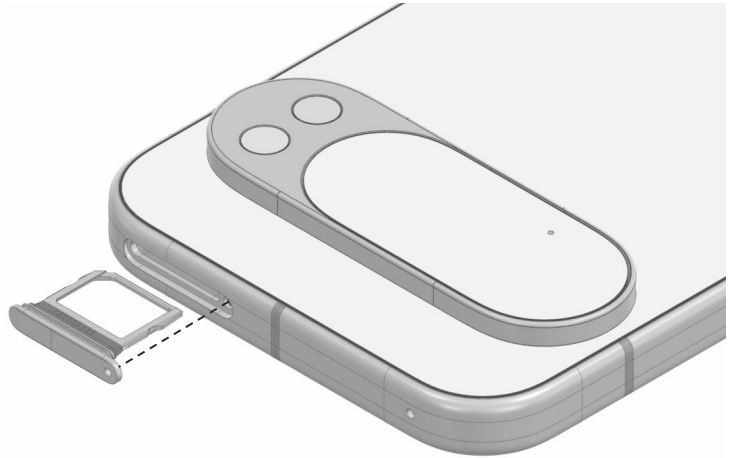

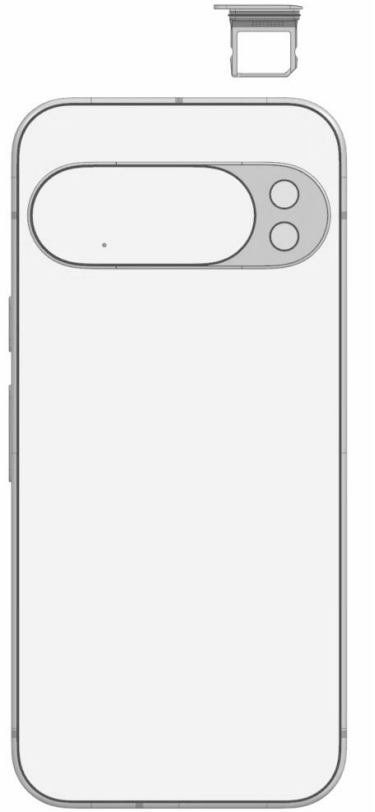

03

Remove Back Cover

Use prying device with thin edge to lift back cover off of the enclosure. The assembly hinges open from the connector side

If you want to preserve the BG sub assembly, you will need to remove the BG sub cowling (see next two steps) to detach the BG sub connector. Otherwise, you can tear the flex cable.

Target Recyclable Materials:

- Aluminum Visor
- Visor Glass
- Back Glass
- Wireless Charge Coil Copper
- Wireless Charge Alignment Magnets
- Graphite

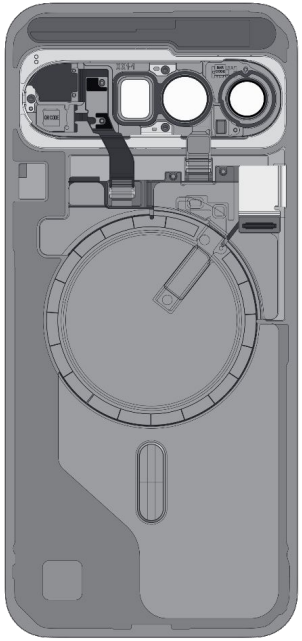



Note

Do not insert prying device too far into device as doing so may damage the battery pack.

04

Remove Visible Screws

Remove all 15 visible screws with a Torx Plus 3IP driver.

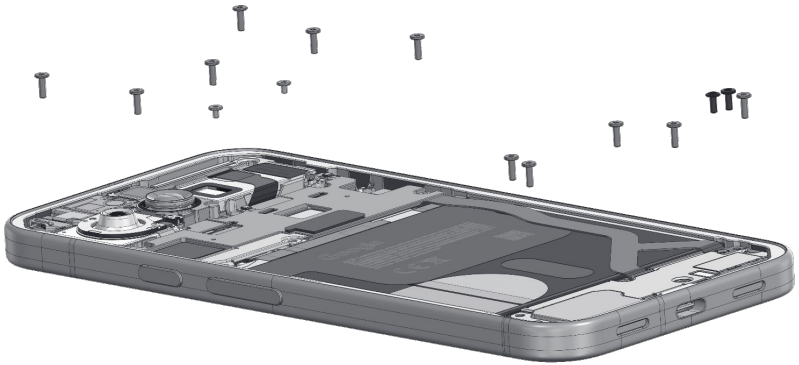

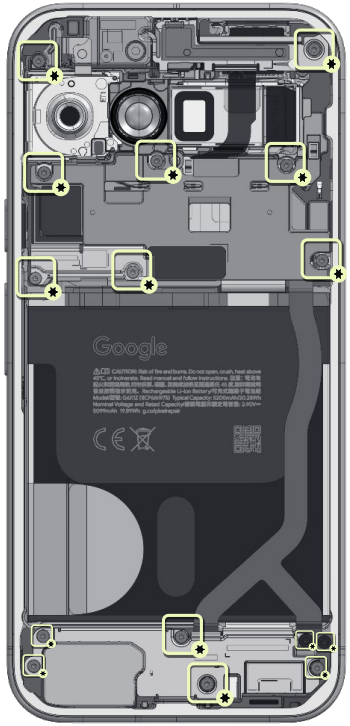

05
Remove Cowlings

2 Not pictured

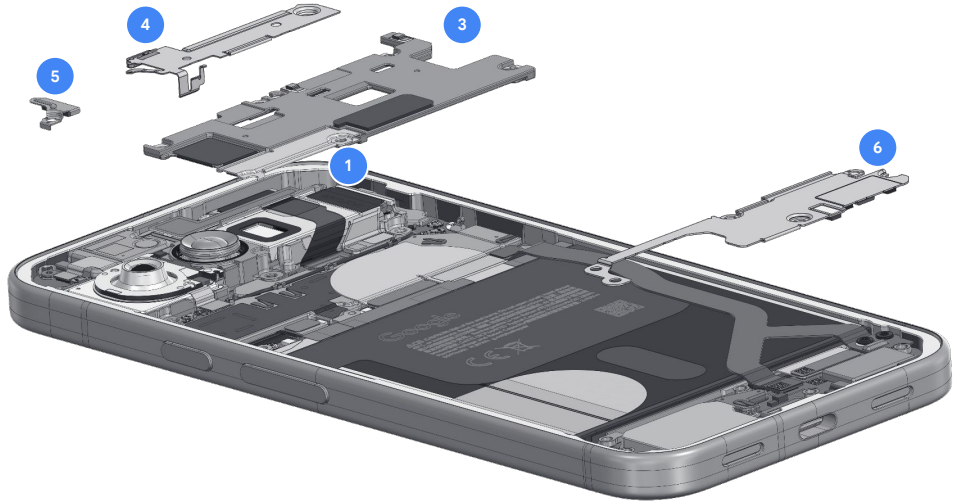

1. Remove the BG sub assembly cowling.
2. Remove the back glass by disconnecting the BG sub assembly - connector from the logic board.
3. Remove the MLB cowling
4. Remove the FCAM Cowling
5. Remove the ANT4 cowling
6. Remove the CLB cowling

Target Recyclable Materials:

- Copper Wireless Charging Coil
- SUS 316 Stainless Steel Cowling
- SUS 304 Stainless Steel Cowling
- Speaker Driver Magnets
- Aluminum Heatsink

06

Detach Connectors & FCAM

1. Detach the battery connector from the logic board.
2. Detach the two RJ flex connectors from the logic board and the chin board.
3. Detach the mic3 flex connector.
4. Detach the FCAM flex connector.

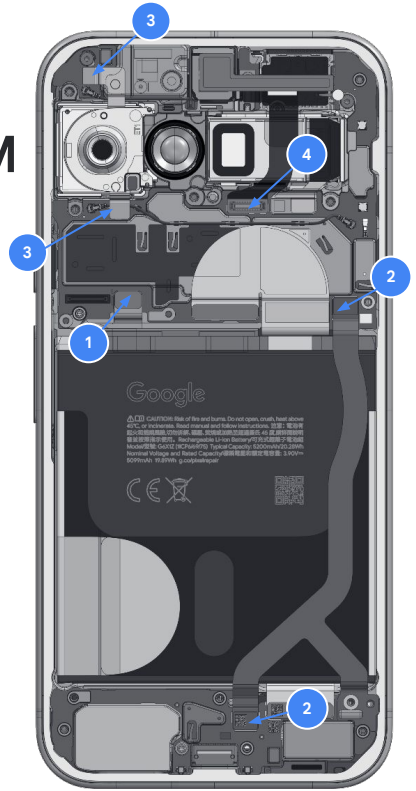

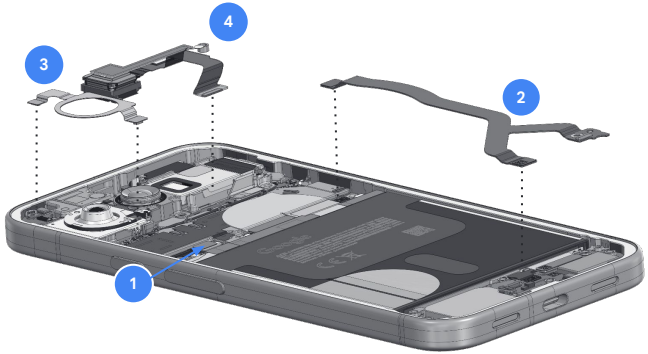

Target Recyclable Materials:

- Gold plating on connectors of flex cable
- Copper Flex Cable
- SUS (sheet) Front Cam Backer
- Minimal Amount Rare Earth Element in Front Cam Magnet

Note

Detach battery connector first to de-energize the system and avoid accidental short and damage to components

07

Remove Battery

Grasp on to the green tab and pull the battery wrap upward until the battery releases from the enclosure.

Note: Half of the battery wrap will stay with the enclosure.

Battery must be recycled with specialized processes such as pyrometallurgy or hydrometallurgy.

Target Recyclable Materials:
- Cobalt
- Lithium
- Nickel
- Copper
- Precious Metals
- Gold plating on flex cable

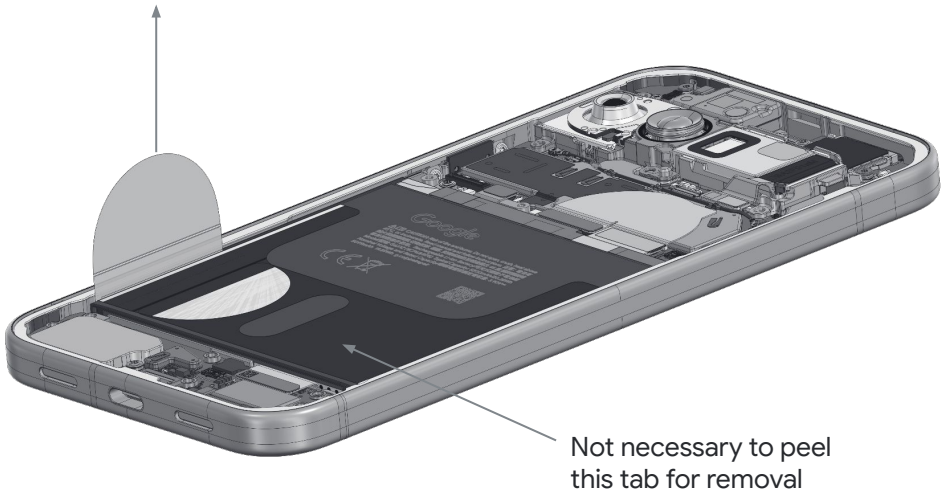

Note

Pulling both tabs away from the battery before removal is unnecessary and may inadvertently damage the battery

08

1. Remove mmWave Screws
2. Detach mmWave Flex
3. Remove mmWave Module

Remove mmWave screws with a Torx Plus 3IP driver. Remove the mmWave module by unplugging the connector and removing the module.

Target Recyclable Materials:

- mmWave Heatsink Aluminum

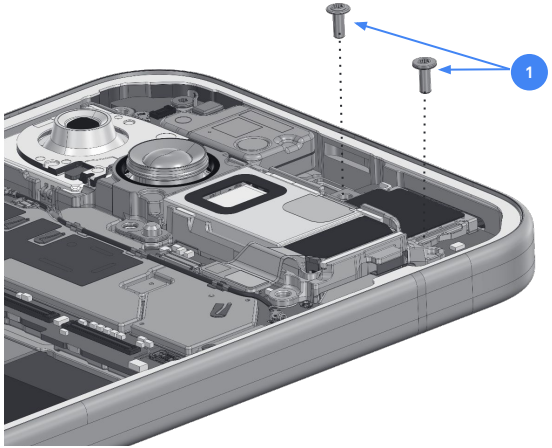

SIM SKU Pictured

SIM SKU

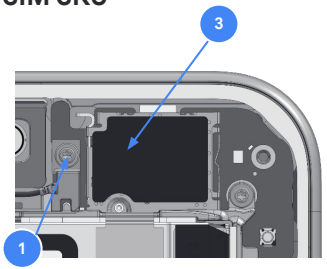

Note: No mmWave on SIM SKU

mmWave SKU

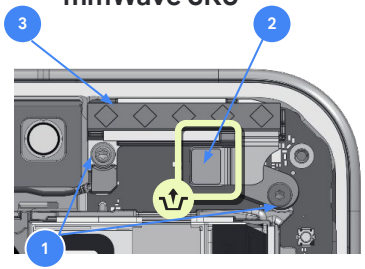

Note: The mmWave is attached to the heatsink

09

Remove Ant4 Board Screw and Coax Cable

1. Remove the Ant4 board screw with a Torx Plus 3IP driver.
2. Remove coax cable.

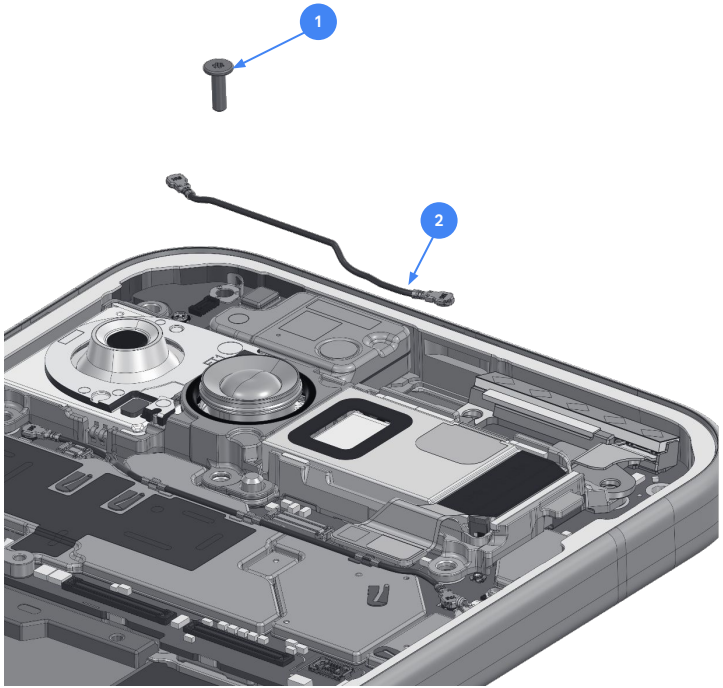

10

Remove CJ Flex

1. Detach the CJ Flex at both B2B connectors and remove.

Target Recyclable Materials:

- Gold plating on connectors of flex cable
- Copper Flex Cable
- SUS (sheet) Front Cam Backer
- Minimal Amount Rare Earth Element in Front Cam Magnet

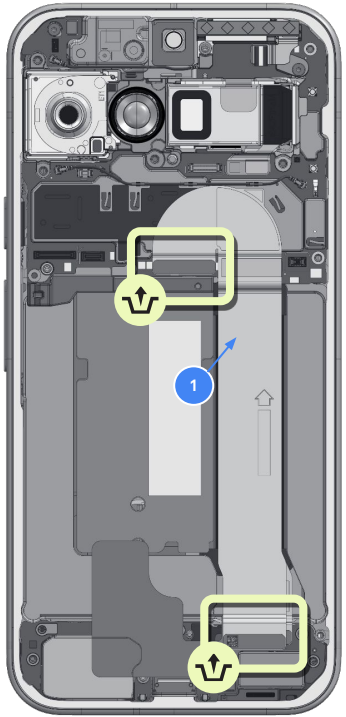

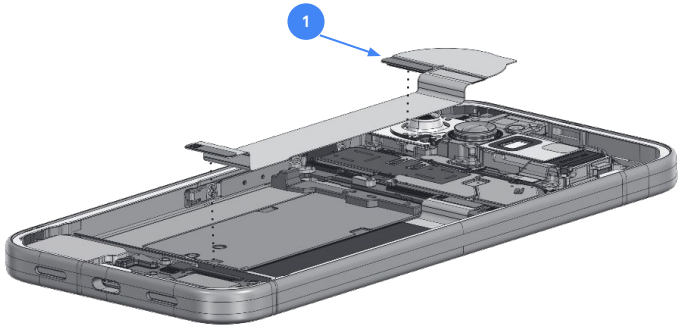

11

Remove Main Logic Board

1. Disconnect the north of the DJ B2B.
2. Remove the main logic board.
3. Remove the ANT4 board.

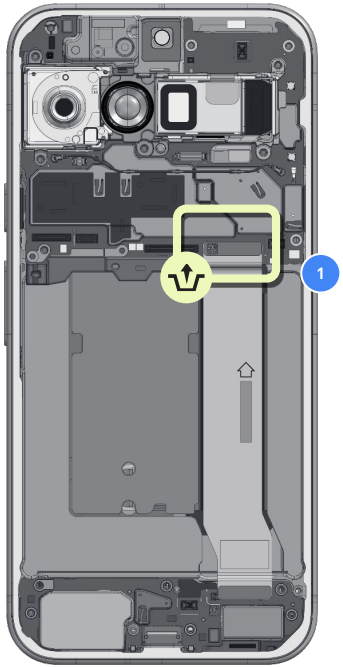

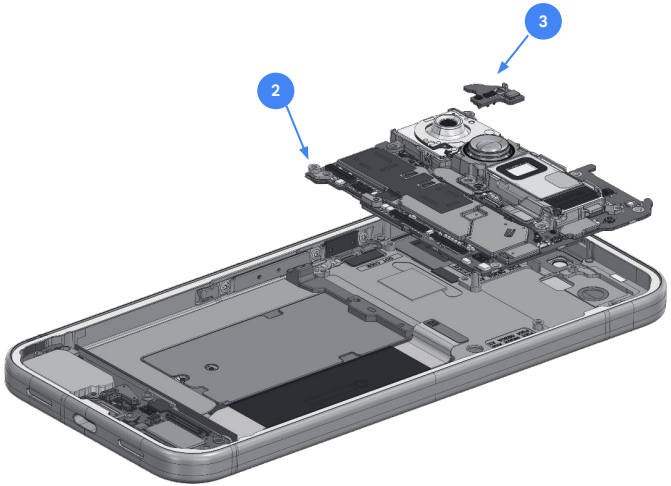

Target Recyclable Materials:

- SUS Rear Cam Backer
- Minimal Amount copper
- Minimal Amount Rare Earth Element in Front Cam Magnet
- Silicone
- Gold plating on flex cable Connector
- Neodymium (Rare Earth Element) Magnets in Wide Rear Cam

12

Remove Top and Bottom Speakers

1. Remove Top Speaker
2. Remove Bottom Speaker

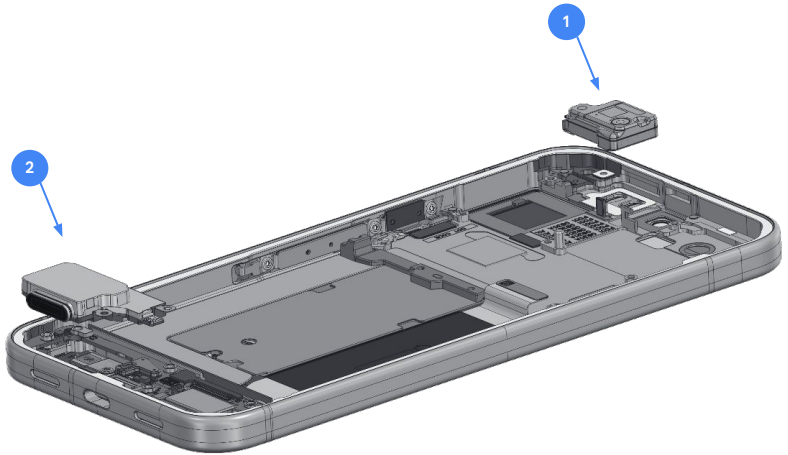

Target Recyclable Materials:

- Neodymium (Rare Earth Element) Magnets in Speaker
- Tungsten Alloy in vibrator mass
- SUS (sheet)
- Copper

13

Remove Display & Cover Glass

If possible, heat device to loosen adhesive. Use prying device with thin edge to lift back cover off of the enclosure.

Unclip DJ flex cowling from back of display, remove DJ flex from display

The display also includes a number of flexible printed circuit boards, which can be pried off.

Target Recyclable Materials:

- Glass
- Copper Film Backing
- Copper Display Flex Cable
- Steel
- Gold plating on flex cable

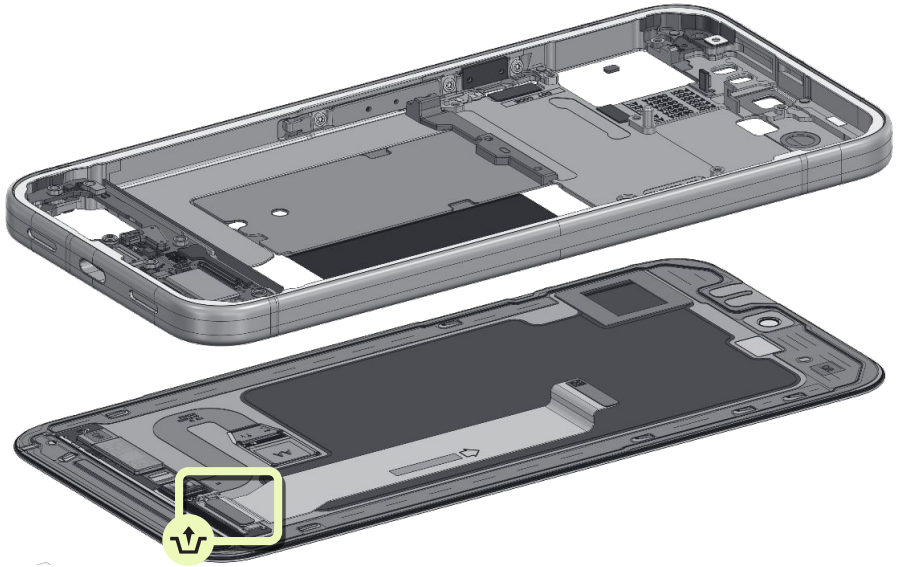

Note

Wear protective gloves and safety glasses when handling damaged parts.

14

Remove Chin Logic Board

1. Remove the chin board screw with a Torx Plus 3IP driver.
2. Remove chin logic board.

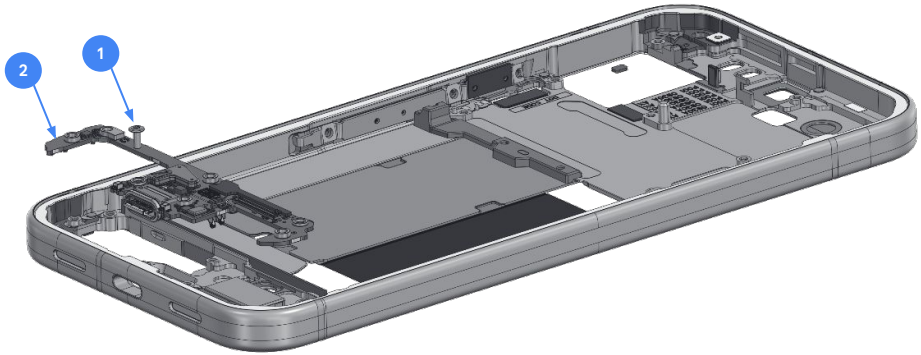

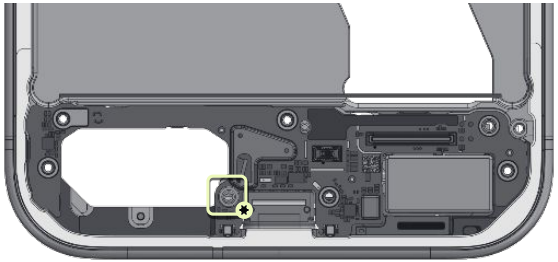

15

1 Remove Haptics / Vibrator

Use the prying tool to remove the haptics vibrator from the enclosure.

Target Recyclable Materials:

- Neodymium (Rare Earth Element) Magnets in Speaker
- Tungsten Alloy in vibrator mass
- SUS (sheet)
- Copper

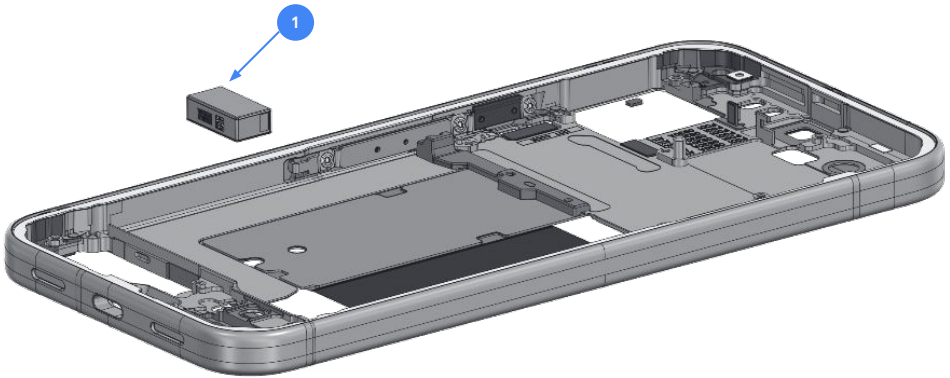

16

Sidekey Bracket

1. Remove sidekey bracket screws (3x). Sidekey flex and bracket can be removed from enclosure.
2. Side keys (power and volume buttons) are held in with TPU snap features and can be pried out of the enclosure.

Target Recyclable Materials:

- Stainless steel Bracket
- Aluminum side key buttons
- Copper Side key flex circuit

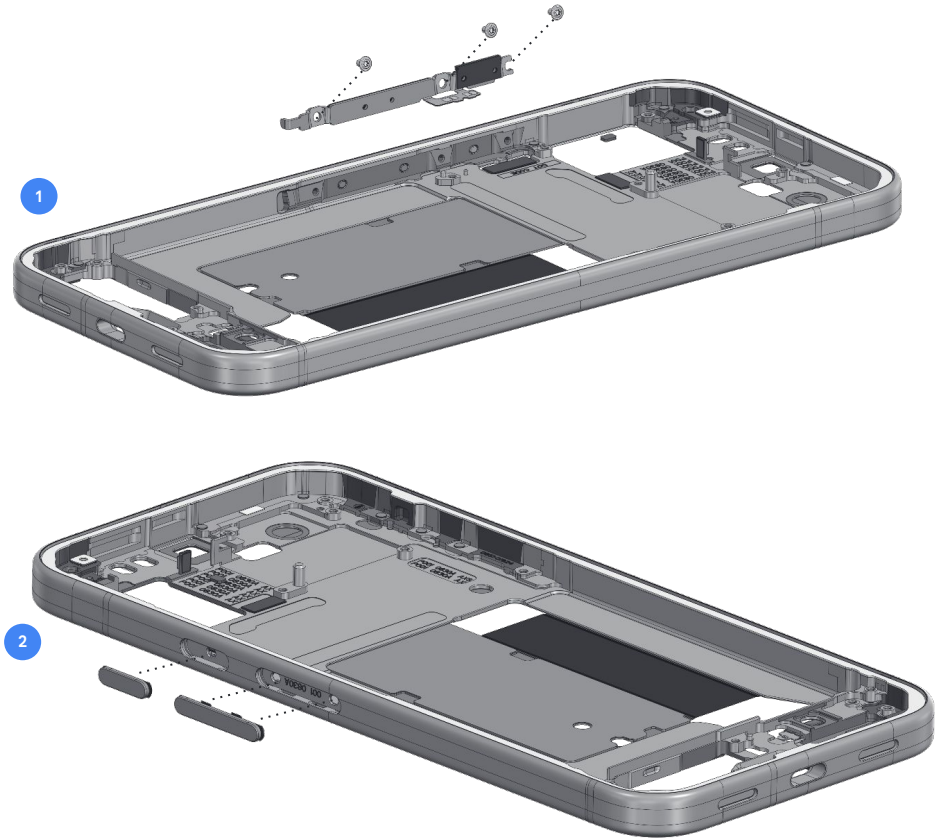

17

Remove Vapor Chamber

1. Remove thermal graphite.
2. Remove vapor chamber from enclosure.

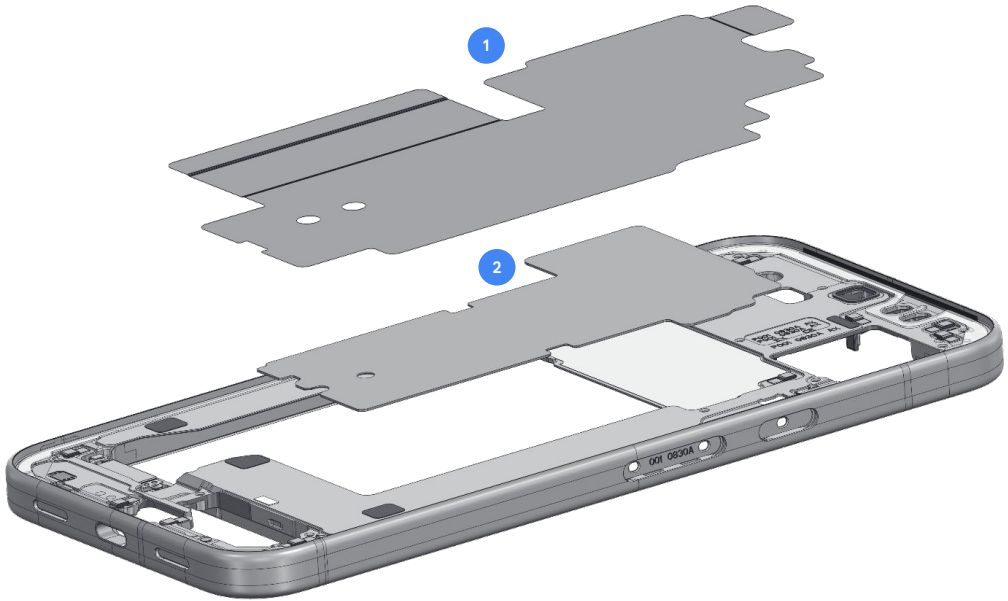

Frequently Asked Questions

Questions	Answer
Is there information related to repair?	This recycling guide is for professional recyclers and is not intended in any way to serve as repair instructions. For repair information or access to repair manuals, please visit: https://store.google.com/magazine/repaircenter 
Does Google offer spare parts to recyclers to refurbish or repair smartphones?	This recycling guide is for recyclers and is not intended in any way to serve as instructions to test, refurbish or repair. For access to Pixel spare parts, please visit: https://www.ifixit.com/Parts/Google_Phone 
How long does it take on average to recycle this device?	Recycling times vary widely and depend on how thoroughly the device is disassembled for material recovery and the specific tools and operational processes employed. To follow the steps in this guide, we estimate the device processing time will take approximately 1:30 - 5:00 minutes for a well-trained recycling technician.
What hazards might there be when disassembling a device?	The main hazards related to the end-of-life processing of this device are: 01. Damaging the battery in such a way that a thermal runaway occurs; 02. Broken glass causing cuts or abrasions; 03. Chemical inhalation–especially if thermal runaway occurs and 04. Exposure to the class 1 laser module