GFiber

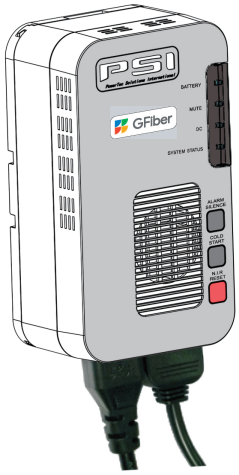

USER'S MANUAL FOR
Internet Battery Back-up

For Model Numbers:

Battery Back-up: Power Supply
Model GUPS320P
Battery Back-up: Battery
Model GUBT320P

WARNINGS

Review the following important safety warnings to avoid bodily injury or damage to equipment during installation or operation of this device.
Read ALL instructions before attempting to install or operate this device.

- This device is intended for indoor use only. To prevent the risk of fire or eletrical shock, install in dry location free from damp or wet environment, or potentially damp or wet environment.
- Adhere to all acceptable operating environment limitations as listed to prevent the risk of fire or electrical shock (see user specifications within User's Manual)
- Risk of fire or explosion if improper battery pack is installed and attempted to operate with this device. Device is rated and approved for use with PowerTec Solutions Internation Li Ion Battery Pack ONLY. Follow User Manual instructions for proper installation and removal of battery pack.
- NO user-replaceable parts within this device. Do not remove cover for any reason.

NOTE: The reference to " Battery Back-up " within this User Manual refers to Models GUPS320P and all package accessories as listed below.

NOTE: Please verify all standard contents are accounted for upon receipt of Battery Back-up. STANDARD: (1) Power Supply/Charger; (2) AC Power Cord; (3) Y Base Cable; (4) Adapter Cable #5; (5) User's Manual; (6) Battery.

Battery Back-up INTRODUCTION

Battery Back-up is designed and intended for use as Desktop or Wall-mount (when ordered with optional Universal) DC power supply and battery back up device for Indoor 12Vdc Optical Network Terminals (ONT).
The Battery Back-up not only provides constant supply of DC power during normal operating conditions, but offers battery backup power in case of electrical power outage. Battery Back-up also provides customer facing Network Interface Reset Intelligence to provide integrated ONT reset technology designed to reduce Provider OPEX.

VISUAL INDICATORS AND CONTROL SWITCHES

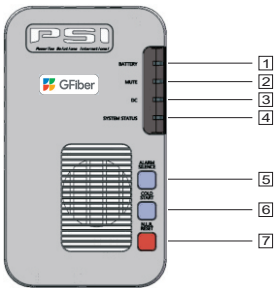

	VISUAL INDICATORS		
1	Battery	Color –Red	Service or replace battery , or battery is not installed in Battery Back-up.
2	Mute	Color-Yellow	Flashing –Audible Alarm silenced for 24hrs. Solid–Audible Alarm Silence Until manually enable.
3	DC	Color –Green	Battery Back-up is working off Standby Power.
4	System Status	Color- Green	Battery Back-up is Recieving AC power load to operate under normal conditions.
	CONTROL SWITCHES		
5	Alarm Silence		Disables Audible Alarm function. Press and release to disable Audible Alarm for 24 hours. Press and hold for 15 seconds to disable Audible Alarm indefinitely. Press and hold for another 15 seconds in order to re-enable Audible Alarm function.
6	Cold Start		Allows Battery Back-up to cold start power off Battery Pack when AC line power is not present and new or replacement pack is connected, press and hold for 3 seconds.
7	N.I.R. Reset		Allows for DC line power reset of optical Network terminal.Press and hold for 3 seconds to reset/reboot optical newwork terminal.

VISUALANDAUDIBLE STATUS/ALARM SIGNALS

STATE	VISUAL INDICATOR	AUDIBLE INDICATOR	DESCRIPTION
Normal	System Status Indication On		Operating under normal AC line power load and conditions, charges battery. Battery is connected and ingood condition.
ON Battery	DC Indicator On		AC line power failure or AC cord disconnection. Battery Back-up is being supplied with battery power.
Replace Battery	Battery IndicatorOn	1/2 secondaudible indicator every15 min.	Replace faulty orend of life battery.
Battery Missing	Battery IndicatorOn		Battery Back-up is operating on AC line power only without available stanby power for outage scenario. When battery is removed from unit, battery indicator will illuminate after 5 sec.
Low Battery	DC Indicator Flashes	1/2 secondaudible indicator 4times perminute.	Battery has reached equal to or less than 30% remaining capacityon battery discharge.

CONNECTION POINTS FOR VAC (INPUT) AND VDC/TELEMETRY (OUTPUT) (BOTTOM VIEW OF MODEL)

UART INTERFACE		
Pin1	12V	12VDC power supply output
Pin2	GND	0V ground
Pin3	TXD	UART Data output
Pin4	RXD	UART Data input

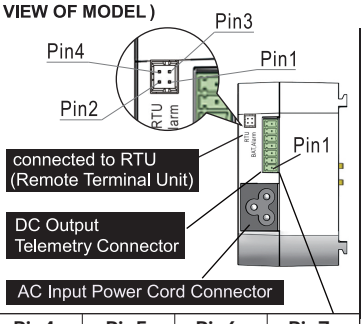

Pin1	Pin2	Pin3	Pin4	Pin5	Pin6	Pin7
OUTPUT+	OUTPUT-	SIGNAL RETURN	ON BATTERY	REPLACE BATTERY	BATTERY MISSING	LOW BATTERY

MODEL	AUDIBLE ALARM	VISUAL ALARM	RELAY ALARM TO ONT
GUPS320P	YES	YES	YES

*RELAY ALARM FROM GUPS320P TO ONT (OPTICAL NETWORK TERMINAL) RELAYS BATTERY ALARMS: 1. LOW BATTERY; 2. ON BATTERY; 3. BATTERY MISSING; 4. REPLACE BATTERY

FIGURE 1

FIGURE 2

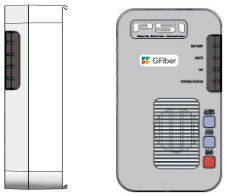

FIGURE 3

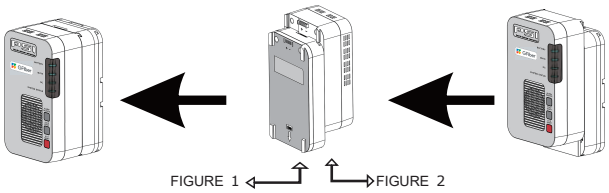

INSTALLATION

A.Slide Battery Back-up Battery Pack (FIGURE 1) onto Battery Back-up Power Supply/Charger (FIGURE 2) until Battery Back-up Battery Pack becomes fully flush with Battery Back-up Power Supply/Charger. You should hear a "click" when Battery Back-up Battery Pack is fully seated.

B.Connect provided AC Power Cord to AC Input Connector on bottom of Battery Back-up Power Supply/Charger.

C.Connect 3 Prong AC Power Cord Plug End into standard 3 Prong AC Receptacle rated for NEMA 5-15 3 Prong AC Plug.

D.Verify "System Status" LED is "On" with Green illumination.

E.Connect Battery Back-up to ONT (Optical Network Terminal).

F.Ensure "System Status" LED is the only illuminated LED on Battery Back-up. If any additional LEDs are illuminated recheck Battery Back-up Battery Pack to make sure it is fully seated and ensure that all wiring from Battery Back-up to ONT is installed correctly as listed by ONT specific instructions.

BATTERY REPLACEMENT

As long as AC line power is available, Battery Back-up can resume operation while battery is replaced.

PROCEDURE:

Remove the Battery Back-up Battery Pack by sliding off in opposite direction of installation(FIGURE 3) and follow "Installation Step A." above for installing new GUBT320P Battery Pack.

NOTE: Please follow all State, Federal, and International Regulations when disposing or recycling Li Ion Battery Pack.

WARNINGS - Li Ion Battery Pack	
⚠	DO NOT DISASSEMBLE BATTERY PACK
⚠	DO NOT DISPOSE OF IN FIRE
⚠	CHARGE ONLY WITH SPECIFIED CHARGER
⚠	DO NOT STORE IN TEMPERATURE OVER 65C

FCC NOTICE

This equipment has been tested and found to comply with the limit for a Class B digital device, pursuant to part 15 of the FCC Rules. These limits are designed to provide protection against harmful interference in a residential installation. This equipment generates, uses and can radiate radio frequency energy and, if not installed and used in accordance with these instructions, may cause harmful interference to radio communications. However, there is no guarantee that interference will not occur in a particular installation. If this equipment does cause harmful interference to radio or television reception, which can be determined by tuning the equipment off and on, the user is encouraged to try to correct the interference by one or more of the following measures: (1) Reorient or relocate the receiving antenna. (2) Increase the separation between the equipment and receiver. (3) Connect the equipment into an outlet on a circuit different from that to which the receiver is connected. (4) Consult the dealer or an experienced radio/TV technician for help.

CAUTION: Any changes or modifications could void the authority granted by the FCC to operate this equipment.

NOTE: PowerTec Solutions International reserves the right to change or correct the contents of this document and does not assume any responsiblity for ommissions or errors.

TECHNICAL SPECIFICATION	
INPUT	
Voltage Range	100Vac－240Vac
Frequency Range	50／60Hz
Input Power Cord	NEMA 5－15 ／3－Prong Power Cord
Intput Ground Reference	Earth Grounded
OUTPUT	AC POWER ON, WITHOUT BATTERY PACK CONNECTED
Output Voltage	12Vdc (Nominal)
Continuous Power Capacity	6.25A max
	AC POWER OFF, WITH BATTERY PACK CONNECTED
Output Voltage	12Vdc （Nominal ）
Continuous Power Capacity	5.5A max
BATTERY	
Battery Type	Lithium Ion Battery Pack
Design Life	10 Years
Battery Capacity	14．8V／5200mAh (connect only one battery box)
Typical Recharge Time	＜12 hrs
Replaceable Pack	Yes
SURGE PROTECTION AND FILTERING	
Lightning ／Surge Protection	Yes（IEC 61000－4－5 2005 LEVEL D）
MANAGEMENT	
Battery Auto－Charge	Yes
Remote Battery Alarming	Optional
Local Alarming（Audible ／Visual ）	Yes
Alarm Silence	
24 Hour Silence	Yes
Disable Indefinitely	Yes
ONT Reset	Yes
Cold Start	Yes
PHYSICAL	
Maximum Dimensions （L×W×D）	155mm×89mm×52.5mm
Weight（lb.）	1．76lb （with battery pack）
ENVIRONMENT	
Operating Temperature	-10℃ - 40℃（14℉ - 104℉）at full power
Operating Humidity	0－95％ noncondensing within enclosure
Max Operating Elevaion	10 ，000ft（3，000m）
Storage Temperature	-30℃ - 65℃(- 22℉-149℉)

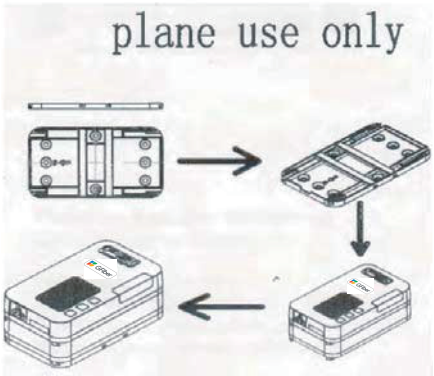

PowerTec Solutions International

480 Reasonover

Franklin, KY 42134