Zivid 2 User Guide

Rev 1.13

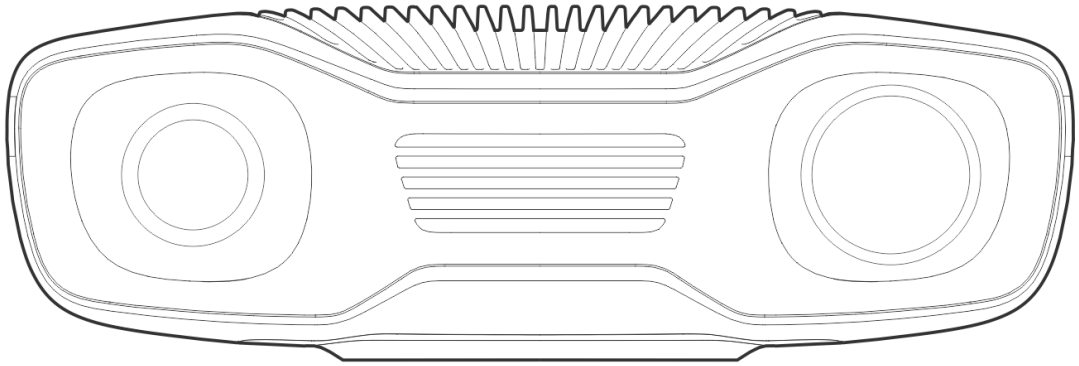

Table of Contents

1. **Regulatory Information** 3
2. **Unboxing** 13
3. **System Requirements** 16
4. **Mechanical Installation** 18
5. **Connectivity and Power Supply** 41
6. **Support** 47
7. **Service and Maintenance** 48
8. **About Zivid** 49

1. Regulatory Information

Zivid 3

The Zivid 3 camera is compliant to international product compliance standards and regulations as listed below. All product compliance for this product is documented in test reports and certificates referencing type number ZVC-02. All compliance-testing referred is performed by accredited 3rd party laboratories. Please contact Zivid for access to certificates, declarations of conformity or other publicly available compliance documents.

Product Safety

- **International**: Standard IEC 62368-1.
- **EU/EFTA (EEA)**: Standard EN 62368-1 and Directive 2014/35/EU (LVD).
- **USA**: Standard UL 62368-1.
- **Canada**: Standard CAN/CSA-C22.2 NO. 62368-1.
- **Australia & New Zealand**: Standard AS/NZS 3820 and National Differences AS/NZS 62368.1.

Electromagnetic Compatibility (EMC)

- **International**: Standards CISPR 32 and CISPR 35, IEC 61000-3-2 and IEC 61000-3-3 (Note 1).
- **EU/EFTA (EEA)**: Standards EN 55032, EN 55035, EN 61000-3-2, EN 61000-3-3 and Directive 2014/30/EU (EMC) (Note 1).
- **USA**: Standard FCC CFR 47 Subpart 15B (Note 2 and 3).
- **Canada**: Standard ICES-003 (Note 4).
- **South Korea**: Standards KS C 9832 and KS C 9835.
- **Australia & New Zealand**: Standards EN 55032 (ACMA).

Photobiological and Laser Safety

- **International**: Standards IEC 60825-1 and IEC 62471-5 (Note 6).
- **EU/EFTA (EEA)**: Standards EN 60825-1 and EN 62471-5.
- **USA**: Standards 21 CFR 1040.10 & 21 CFR 1040.11 and Laser Notice No. 56 and 57 (Note 7).

Ingress protection

- **EU/EFTA (EEA)**: Standard EN 60529 (IP65) (Note 9).

Environmental Compliance

- **EU/EFTA (EEA)**: Directive 2011/65/EU with amd. (EU) 2015/863 (RoHS). Regulation (EC) No 1907/2006 (REACH).
- **USA**: TSCA PBT and TSCA PFAS.

Notes

- **EMC Class B limits**

The product has been tested according to CISPR32/EN 55032 and complies with Class B limits.

- **USA - FCC CFR 47 Subpart 15B, Class B Compliance Statement**

  This device complies with part 15 of the FCC rules. Operation is subject to the following two conditions: (1) this device may not cause harmful interference, and (2) this device must accept any interference received, including interference that may cause undesired operation.

- **USA - FCC CFR 47 Subpart 15B, Class B Interference Statement**

  This equipment has been tested and found to comply with the limits for a Class B digital device, pursuant to part 15 of the FCC Rules. These limits are designed to provide reasonable protection against harmful interference in a residential installation.

  This equipment generates, uses and can radiate radio frequency energy and, if not installed and used in accordance with the instructions, may cause harmful interference to radio communications. However, there is no guarantee that interference will not occur in a particular installation. If this equipment does cause harmful interference to radio or television reception, which can be determined by turning the equipment off and on, the user is encouraged to try to correct the interference by one or more of the following measures:

  - Reorient or relocate the receiving antenna.
  - Increase the separation between the equipment and receiver.
  - Connect the equipment into an outlet on a circuit different from that to which the receiver is connected.
  - Consult the dealer or an experienced radio/TV technician for help.

- **Canada - ICES-003, EMC Class B limits**

  This Class B digital apparatus complies with Canadian ICES-003. Cet appareil numérique de la classe B est conforme à la norme NMB-003 du Canada.

- **Signal protection**

  Do not install Zivid cameras and cables next to high voltage devices that can generate high levels of electromagnetic disturbance. Do not route camera cabling through the same trunks/ conduits with AC power cables and cables emitting high levels of disturbance.

- **Photobiological Safety for image projectors**

  The complete product is tested according to standard IEC 60825-1 (cl.4.4 - Laser products designed to function as conventional lamps) and found to comply with Laser Class 1. The entire product is also tested according to standard IEC 62471-5 and found to comply with Risk Group 2.

- **USA - Compliance with FDA Performance Standards**

  This product complies with FDA performance standards for laser products except for conformance as a Risk Group 2 LIP as defined in IEC 62471-5: Ed. 1.0. For more information see Laser Notice 56 and 57, dated May 8, 2019.

- **Do not stare into the beam**

  As with any bright light source, do not stare into the beam, RG2 IEC 62471-5.

  The image projector is an integral part of the product:

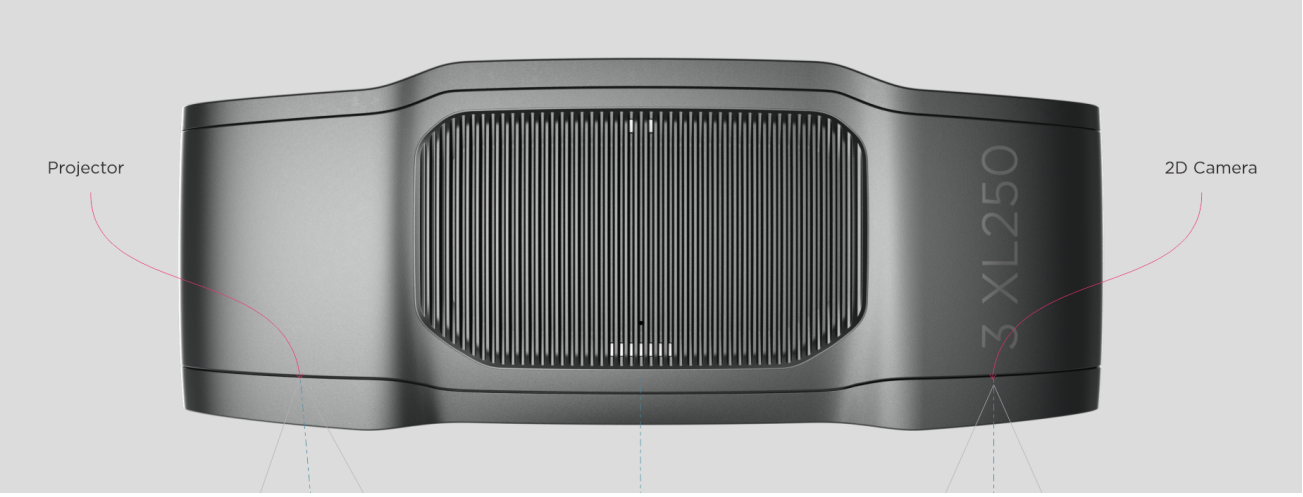

Avoid the use of optical aids such as binoculars or telescopes inside the beam projected through the projector (lamp aperture).

- **Fan-duct**

  The camera's fan-duct is outside the IP65 classified enclosure (the fan itself is classified as minimum IP65).

General Warnings

- **Mounting**

  Read the mounting instructions before installation and follow these thoroughly. Use the intended mounting accessories and hardware. Mounting the camera incorrectly could result in hazardous situations, malfunctions, or damage to the camera.

- **Controls and adjustments**

  Caution - Use of controls or adjustments or performance of procedures other than those specified herein may result in hazardous radiation exposure. Testing and approvals specified in this document have been performed using the parameters and adjustments described. Additional fault conditions and abnormal operations are evaluated throughout the compliance process. Nevertheless, use-, control- or adjustments of the camera, not anticipated at the time of approval and not specified in this document, may result in hazardous radiation exposure.

- **Ambient temperature**

  Do not use the product in areas where ambient temperature exceeds the specified range given in the datasheet. This could cause overheating, result in hazardous situations, malfunctions or damage to the camera.

- **Cooling clearance**

  Zivid cameras use active and passive cooling, allow some space around the device for airflow, and do not block the air opening on its front and rear sides. See the datasheets for the operating temperature range for your camera.

- **Do not open or modify**

  The device contains no user-serviceable parts inside. Do not try to open or modify this product. This will:

  - Void the product-safety, EMC, and photobiological-safety regulations listed in this section.

- Might limit the intended use of the equipment.
- Might cause hazardous situations.
- Might expose you to hazardous light emission, above the levels of eye safety.
- Might cause electrical- and fire hazards due to exposure of hazardous electrical power levels.
- Might lead to harmful interference with other equipment or radio communication.
- Might cause damage to the system.

- **Power supply and cables**

  We strongly recommend using Zivid Power Supply and Zivid's Cables with all Zivid cameras to ensure compliance with Safety and EMC emission and immunity standards.

Product marking (Rating label)

- **Label Artwork**



- **Warnings**

Class 1 Laser Product, RG2 Image Projector, CAUTION: Do not stare into the beam

Appareil a Laser de Classe 1, RG2 Projecteur d'image, ATTENTION: Ne pas observer fixement le faisceau, RG2

Do not open – No pas ouvrir

- **Explanation of symbols**

Symbol	Explanation
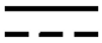	The product must be supplied from a DC power source.
	After the product’s end of life, it must be handled according to any national laws and regulations for electronic waste. Do not discard the product as unsorted waste.
	Read the user manual.

- **Location**



Zivid 2+

The Zivid 2+ camera is compliant to international product compliance standards and regulations. Among these are:

Product Safety

- **International**: IEC 62368-1, documented in CB test report and -certificate.
- **USA and Canada**: UL 62368-1/CAN/CSA-C22.2 NO. 62368-1, documented in NRTL Description report and certificate.
- **Europe**: EN 62368-1, documented in European group differences and national differences to CB test report, European Directive 2014/35/EU (LVD).
- **Australia**: AS/NZS 3820, documented in Letter of Authorization.

Electromagnetic Compatibility (EMC)

- **International**: CISPR 32 and CISPR 35, IEC 61000-3-2 and IEC 61000-3-3.
- **Europe**: EN 55032 Class B, EN 55035, EN 61000-3-2 and EN 61000-3-3, European Directive 2014/30/EU (EMC).
- **USA**: FCC15B Class B (see note 1).
- **Canada**: ICES-003 (B) / NMB-003 (B) (see note 2).

- **South Korea**: KS C 9832 and KS C 9832.

Photobiological Safety

- **International**: IEC 62471-5, Classified acc. to risk group 2. Documented in CB test report and -certificate (see note 3).

Ingress protection

- EN 60529 - The product is tested for compliance according to IP65. (See note 4).

Environmental Compliance

- **Europe**: RoHS Directive 2011/65/EU with amd. (EU) 2015/863. REACH Regulation (EC) No 1907/2006.

Notes

- **USA - EMC Class B**

  FCC Compliance Statement:

  This device complies with part 15 of the FCC rules. Operation is subject to the following two conditions: (1) this device may not cause harmful interference, and (2) this device must accept any interference received, including interference that may cause undesired operation.

  FCC Class B Interference Statement:

  This equipment has been tested and found to comply with the limits for a Class B digital device, pursuant to part 15 of the FCC Rules. These limits are designed to provide reasonable protection against harmful interference in a residential installation.

  This equipment generates, uses and can radiate radio frequency energy and, if not installed and used in accordance with the instructions, may cause harmful interference to radio communications. However, there is no guarantee that interference will not occur in a particular installation.

  If this equipment does cause harmful interference to radio or television reception, which can be determined by turning the equipment off and on, the user is encouraged to try to correct the interference by one or more of the following measures:

  - Reorient or relocate the receiving antenna.
  - Increase the separation between the equipment and receiver.
  - Connect the equipment into an outlet on a circuit different from that to which the receiver is connected.
  - Consult the dealer or an experienced radio/TV technician for help.

  Do not modify the equipment:

  Changes or modifications to the equipment not expressly approved by the party responsible for compliance could void the user’s authority to operate the equipment. I.e.: Do not modify the equipment. This will:

  - Void the product-safety, EMC, and photobiological-safety regulations listed in this section.
  - Might limit the intended use of the equipment.
  - Might cause hazardous situations.

- Might lead to harmful interference with other equipment or radio communication.
- Might cause damage to the system.

- **Canada - EMC Class B**

  This Class B digital apparatus complies with Canadian ICES-003.

  Cet appareil numérique de la classe B est conforme à la norme NMB-003 du Canada.
- **Photobiological Safety, Risk Group 2**

  As with any bright light source, do not stare into the beam, RG2 IEC 62471-5.



- **Ingress Protection**

  The camera’s fan-duct is outside the IP65 classified enclosure (the fan itself is classified as minimum IP65).
- **Mounting**

  Read the mounting instructions before installation and follow these thoroughly. Use the intended mounting accessories and hardware. Mounting the camera incorrectly could result in hazardous situations, malfunctions, or damage to the camera.
- **Ambient temperature**

  Do not use the product in areas where ambient temperature exceeds the specified range given in the datasheet. This could cause overheating, result in hazardous situations, malfunctions or damage to the camera.
- **Explanation of symbols marked on the product**

Symbol	Explanation
	The product must be supplied from a DC power source.
	After the product’s end of life, it must be handled according to any national laws and regulations for electronic waste. Do not discard the product as unsorted waste.
	Read the user manual.

- **Compliance documentation**

  Please contact Zivid for access to declarations of conformity or other publicly available compliance documents.

Zivid 2

The Zivid 2 camera is compliant to international product compliance standards and regulations. Among these are:

Product Safety

- **International**: IEC 62368-1, documented in CB test report and -certificate.
- **USA and Canada**: National Differences to CB test report according to UL 62368-1/CAN/CSA-C22.2 NO. 62368-1.
- **Europe**: EN 62368-1, documented in European group differences and national differences to CB test report, European Directive 2014/35/EU (LVD).
- **Australia**: National Differences to CB test report according to AS/NZS 62368.1.

Electromagnetic Compatibility (EMC)

- **International**: CISPR 32 and CISPR 35, IEC 61000-3-2 and IEC 61000-3-3.
- **Europe**: EN 55032 Class B, EN 55035, EN 61000-3-2 and EN 61000-3-3, European Directive 2014/30/EU (EMC).
- **USA**: FCC15B Class B (see note 1).
- **Canada**: ICES-003 (B) / NMB-003 (B) (see note 2).
- **South Korea**: KS C 9832 and KS C 9832.

Photobiological Safety

- **International**: IEC 62471-5, Classified acc. to risk group 2. Documented in CB test report and -certificate (see note 3).

Ingress protection

- EN 60529 - The product is tested for compliance according to IP65. (See note 4).

Environmental Compliance

- **Europe**: RoHS Directive 2011/65/EU with amd. (EU) 2015/863. REACH Regulation (EC) No 1907/2006.

Notes

- **USA - EMC Class B**

  FCC Compliance Statement:

  This device complies with part 15 of the FCC rules. Operation is subject to the following two conditions: (1) this device may not cause harmful interference, and (2) this device must accept any interference received, including interference that may cause undesired operation.

  FCC Class B Interference Statement:

  This equipment has been tested and found to comply with the limits for a Class B digital device, pursuant to part 15 of the FCC Rules. These limits are designed to provide reasonable protection against harmful interference in a residential installation.

This equipment generates, uses and can radiate radio frequency energy and, if not installed and used in accordance with the instructions, may cause harmful interference to radio communications. However, there is no guarantee that interference will not occur in a particular installation.

If this equipment does cause harmful interference to radio or television reception, which can be determined by turning the equipment off and on, the user is encouraged to try to correct the interference by one or more of the following measures:

- Reorient or relocate the receiving antenna.
- Increase the separation between the equipment and receiver.
- Connect the equipment into an outlet on a circuit different from that to which the receiver is connected.
- Consult the dealer or an experienced radio/TV technician for help.

Do not modify the equipment:

Changes or modifications to the equipment not expressly approved by the party responsible for compliance could void the user's authority to operate the equipment. I.e.: Do not modify the equipment. This will:

- Void the product-safety, EMC, and photobiological-safety regulations listed in this section.
- Might limit the intended use of the equipment.
- Might cause hazardous situations.
- Might lead to harmful interference with other equipment or radio communication.
- Might cause damage to the system.

- **Canada - EMC Class B**

  This Class B digital apparatus complies with Canadian ICES-003.

  Cet appareil numérique de la classe B est conforme à la norme NMB-003 du Canada.

- **Photobiological Safety, Risk Group 2**

  As with any bright light source, do not stare into the beam, RG2 IEC 62471-5.



- **Ingress Protection**

  The camera's fan-duct is outside the IP65 classified enclosure (the fan itself is classified as minimum IP65).

- **Mounting**

  Read the mounting instructions before installation and follow these thoroughly. Use the intended mounting accessories and hardware. Mounting the camera incorrectly could result in hazardous situations, malfunctions, or damage to the camera.

- **Ambient temperature**

  Do not use the product in areas where ambient temperature exceeds the specified range given in the datasheet. This could cause overheating, result in hazardous situations, malfunctions or damage to the camera.

- **Explanation of symbols marked on the product**

Symbol	Explanation
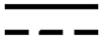	The product must be supplied from a DC power source.
	After the product’s end of life, it must be handled according to any national laws and regulations for electronic waste. Do not discard the product as unsorted waste.
	Read the user manual.

- **Compliance documentation**

  Please contact Zivid for access to declarations of conformity or other publicly available compliance documents.

2. Unboxing

Each Zivid camera ships with the camera itself plus any optional accessories ordered with it; expand your camera family below to see exactly what's in the box.

Zivid 3

In the Zivid box you will find:

- Zivid 3 3D camera.

Optional/as ordered:

- 24V power supply (M12-5 female).
- Power cables (straight connector), available in 5 m, 10 m, and 20 m.
- Power extension cable (M12-5 female, angled connector), available in 3 m.
- Ethernet (CAT-6A) cables (straight connector), available in 5 m, 10 m and 25 m.
- Ethernet (CAT-6A) extension cables (angled connector), available in 3 m.
- Calibration Board (300 x 300 mm).
- Mount of choice (Stationary Mount or On-Arm Mount).

All accessories can be ordered separately.



Zivid 2+

In the Zivid box you will find:

- Zivid 2+ 3D camera

Optional/as ordered:

- 24V power supply (M12-5 male).
- Power cables (straight connector), available in 5 m, 10 m, and 20 m.
- Power extension cable (M12-5 male, angled connector), available in 3 m.
- Ethernet (CAT-6A) cables (straight connector), available in 5 m, 10 m and 25 m.
- Ethernet (CAT-6A) extension cables (angled connector), available in 3 m.
- Calibration Board of choice (300 x 300 mm or 125 x 150 mm).
- Mount of choice (Stationary Mount or On-Arm Mount).
- Tripod Adapter.

All accessories can be ordered separately.



Zivid 2

In the Zivid box you will find:

- Zivid 2 3D camera.

Optional/as ordered:

- 24V power supply (M12-5 male).
- Power cables (straight connector), available in 5 m, 10 m, and 20 m.
- Power extension cable (M12-5 male, angled connector), available in 3 m.
- Ethernet (CAT-6A) cables (straight connector), available in 5 m, 10 m and 25 m.

- Ethernet (CAT-6A) extension cables (angled connector), available in 3 m.
- Calibration Board of choice (300 x 300 mm or 125 x 150 mm).
- Mount of choice (Stationary Mount or On-Arm Mount).
- Tripod Adapter.

All accessories can be ordered separately.



3. System Requirements

Zivid requires Windows 10/11, Ubuntu 20.04/22.04/24.04/26.04, or Jetson Linux 36/39, plus a dedicated or integrated GPU and a 10G Ethernet connection for full performance (1G is supported at reduced performance).

OS	Windows 10/11, Linux Ubuntu 20.04/22.04/24.04/26.04 or Jetson Linux 36/39
Dedicated GPU	A dedicated GPU gives the best performance with Zivid. It is also the best choice if the GPU will be used for more than Zivid's computations. A medium to high-end NVIDIA GPU with at least 3 GB of memory is required for optimal performance. This is the preferred solution for Zivid. **Recommendations:** • NVIDIA GeForce GTX 1060 or newer. • NVIDIA GeForce MX150 or newer.
CPU with integrated GPU	This is the most cost-efficient solution for Zivid. The benefit of an integrated GPU is that the data transfer from GPU to CPU is fast. It is also beneficial for applications that require low power consumption, e.g., battery-powered mobile platforms. A high-end integrated GPU with at least 3 GB of memory available is required for optimal performance. **Recommendations:** • Intel i7 with HD630 or better.
Ethernet	Full performance: • 10GBASE-T (10G Copper Ethernet) adapter connected via PCI Express or Thunderbolt 3. Reduced performance: • 1000BASE-T and NBASE-T (1G, 2.5G, and 5G over copper) connections. **Recommendations:** • ASUS XG-C100C 10G Network Adapter PCI-E x4 Card. • QNAP QNA series Thunderbolt 3 to 10GbE Adapter.

GPU compute backend

Zivid SDK runs on one of two GPU compute backends, chosen when you install the SDK. Which backend to pick depends on your GPU vendor:

Architecture	CUDA	OpenCL
Intel AMD64	No	Yes
NVIDIA AMD64	Optimal [1]	Yes [2]
NVIDIA ARM64 (Jetson)	Yes	No

[1] NVIDIA AMD64 with CUDA requires an NVIDIA driver that supports CUDA 12 or newer.

[2] If you install the OpenCL version of the SDK on an NVIDIA AMD64 GPU, the SDK treats it as an unsupported compute device and will not run until you edit the Config.yml file to explicitly allow it. See Select Compute Device for details. Zivid recommends installing the CUDA version instead, so no extra configuration is needed.

See About Gpu for driver installation and how to select a compute device.

Check out the Recommended Industrial PCs if you need recommendations for compute devices.

4. Mechanical Installation

4.1. Working Distance and Field-of-View

This page shows the field-of-view (FOV) diagrams and CAD datum reference for each Zivid camera model; use the FOV and imaging distance calculator to find the relation between distances and FOV for your camera.

Note

The FOV figures on this page represent the overlap between the 2D camera and the projector. This overlap varies by roughly up to a degree from unit to unit, due to unit-to-unit variation in optical alignment from assembly (see the datasheets for the specified tolerance). The FOV figures, the calculator, and the CAD files are therefore all nominal, not exact for a specific unit.

Zivid 3

XL250

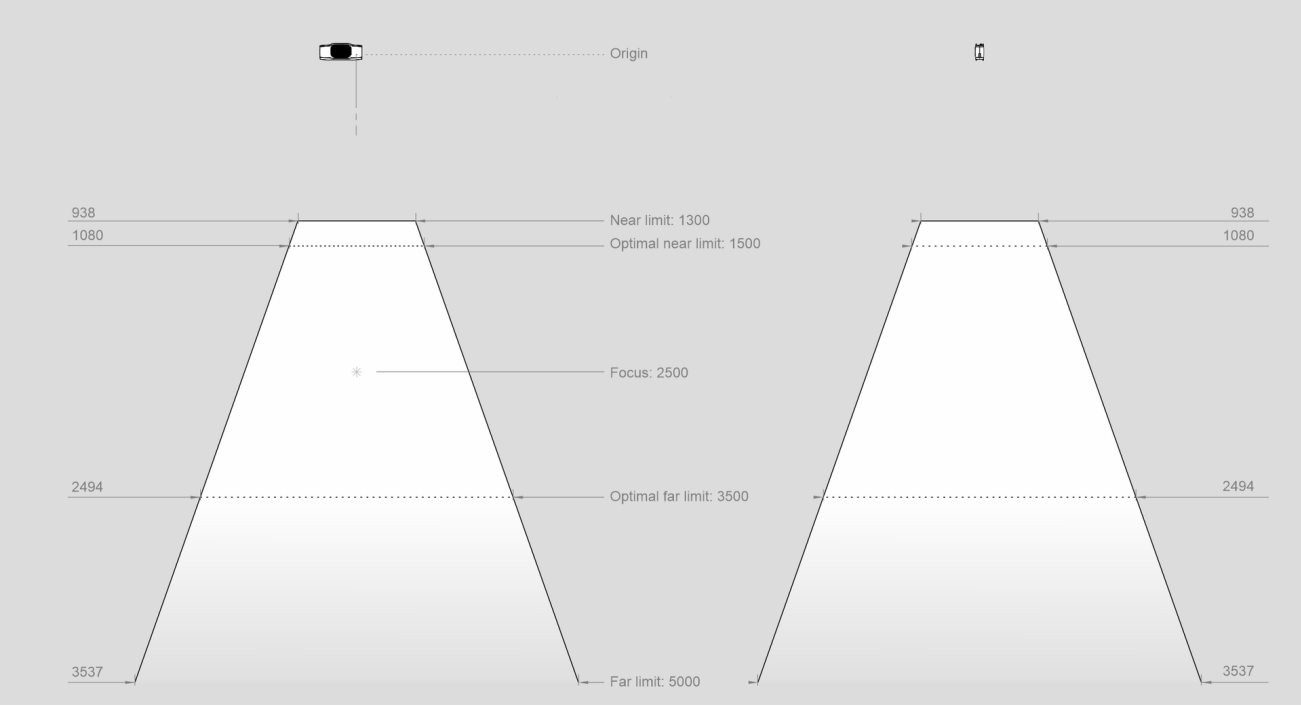

CAD model information

The datum reference of the Zivid 3 CAD models is at the center of the Ø5 positioning hole (B in the image below).



The Optical Center Label is found relative to the datum reference.

Zivid 2+

MR130/M130

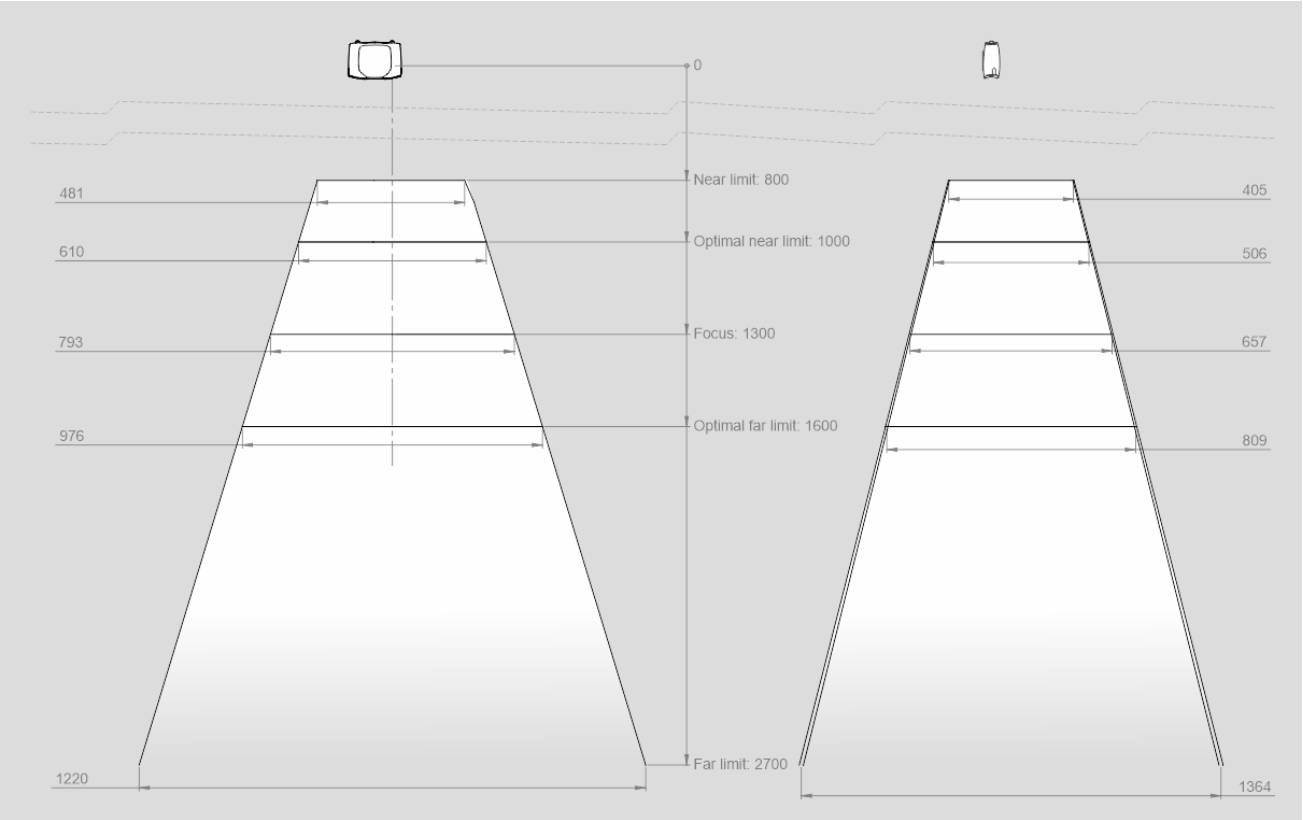

LR110/L110

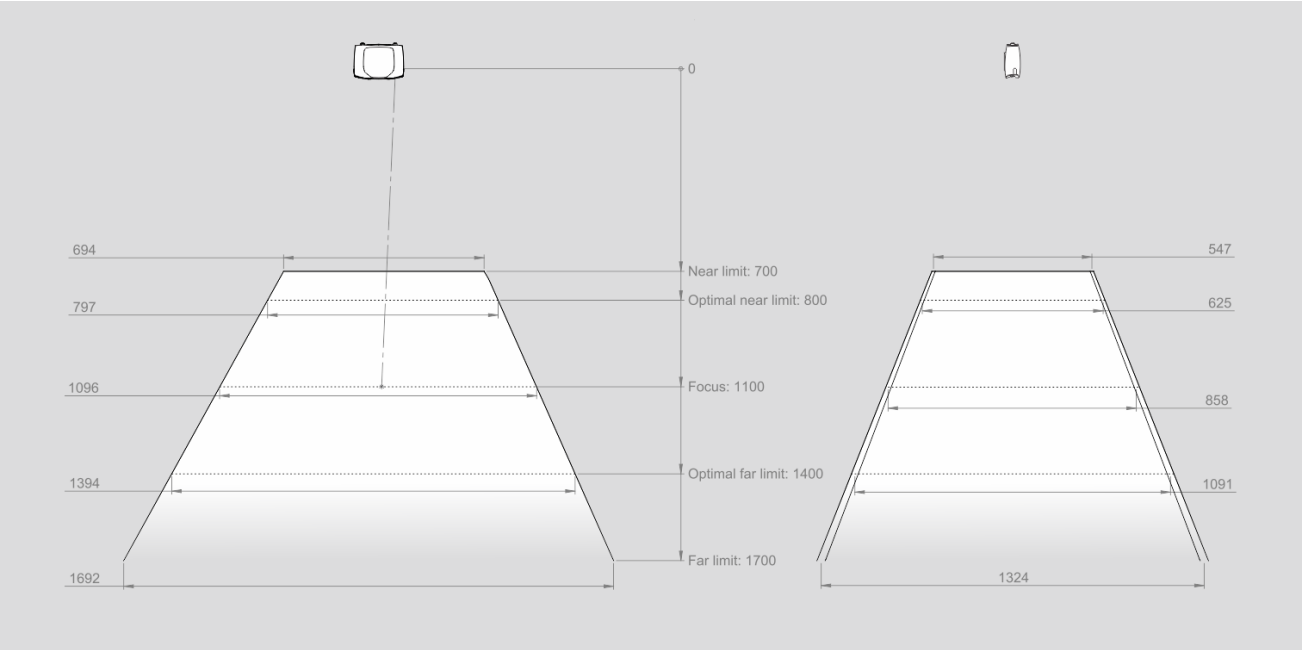

MR60/M60

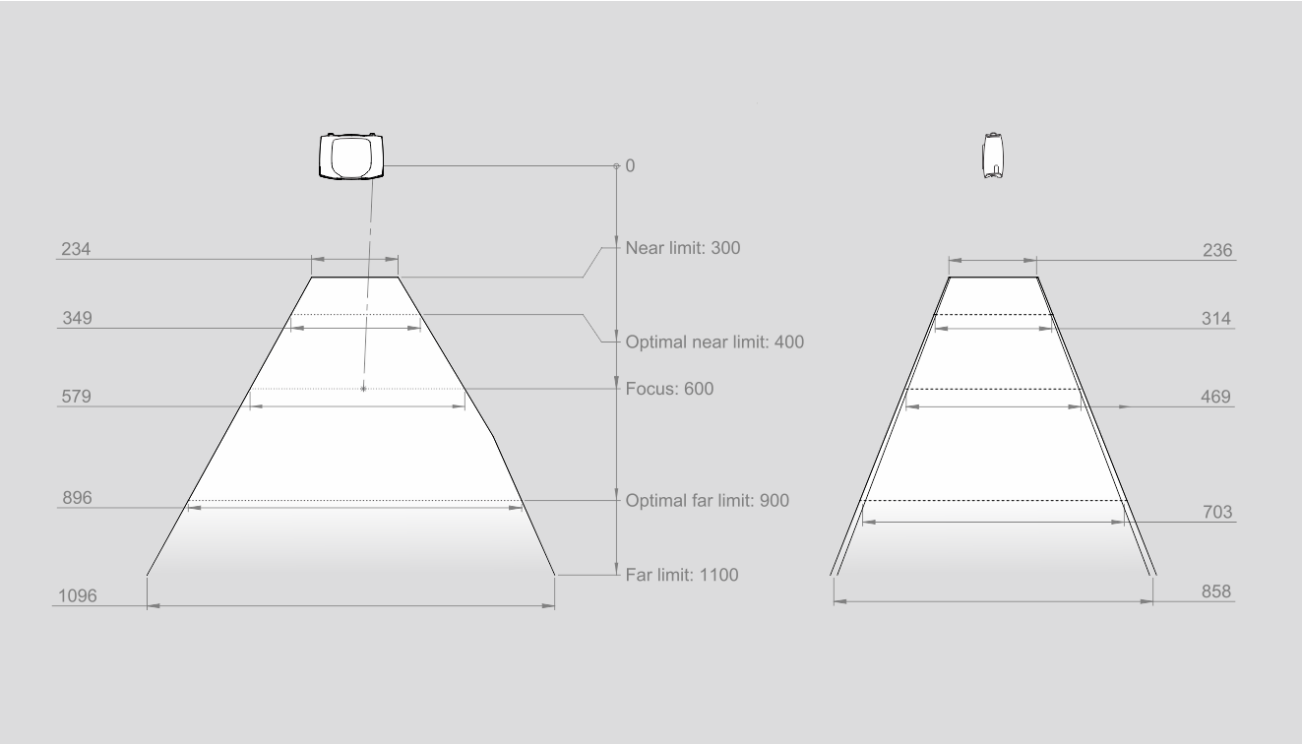
0
Near limit: 300
Optimal near limit: 400
Focus: 600
Optimal far limit: 900
Far limit: 1100
234
349
579
896
1096
236
314
469
703
858

CAD model information

The datum reference of the Zivid 2+ CAD models is at the center of the Ø5 positioning hole (B in the image below).



The Optical Center Label is found relative to the datum reference.

Zivid 2

M70

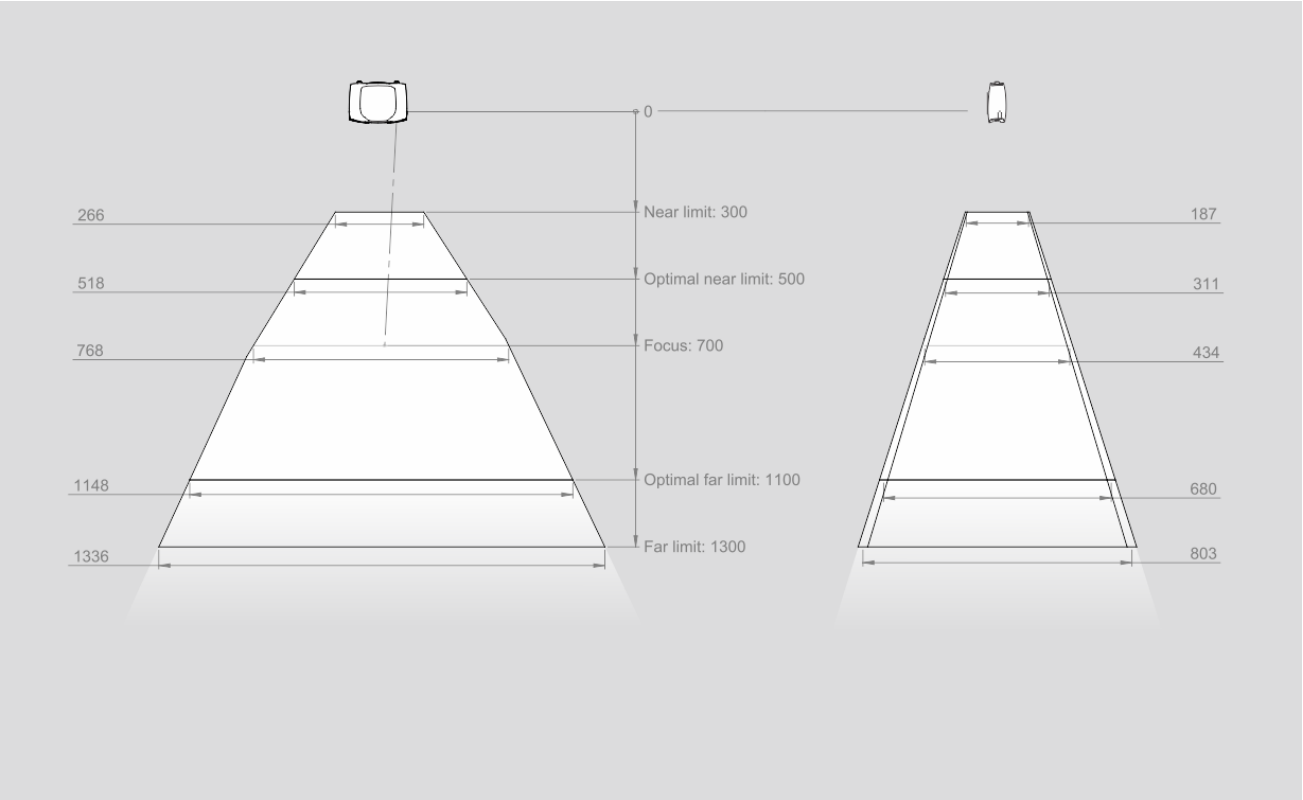
0
266
Near limit: 300
518
Optimal near limit: 500
768
Focus: 700
1148
Optimal far limit: 1100
1336
Far limit: 1300
187
311
434
680
803

L100

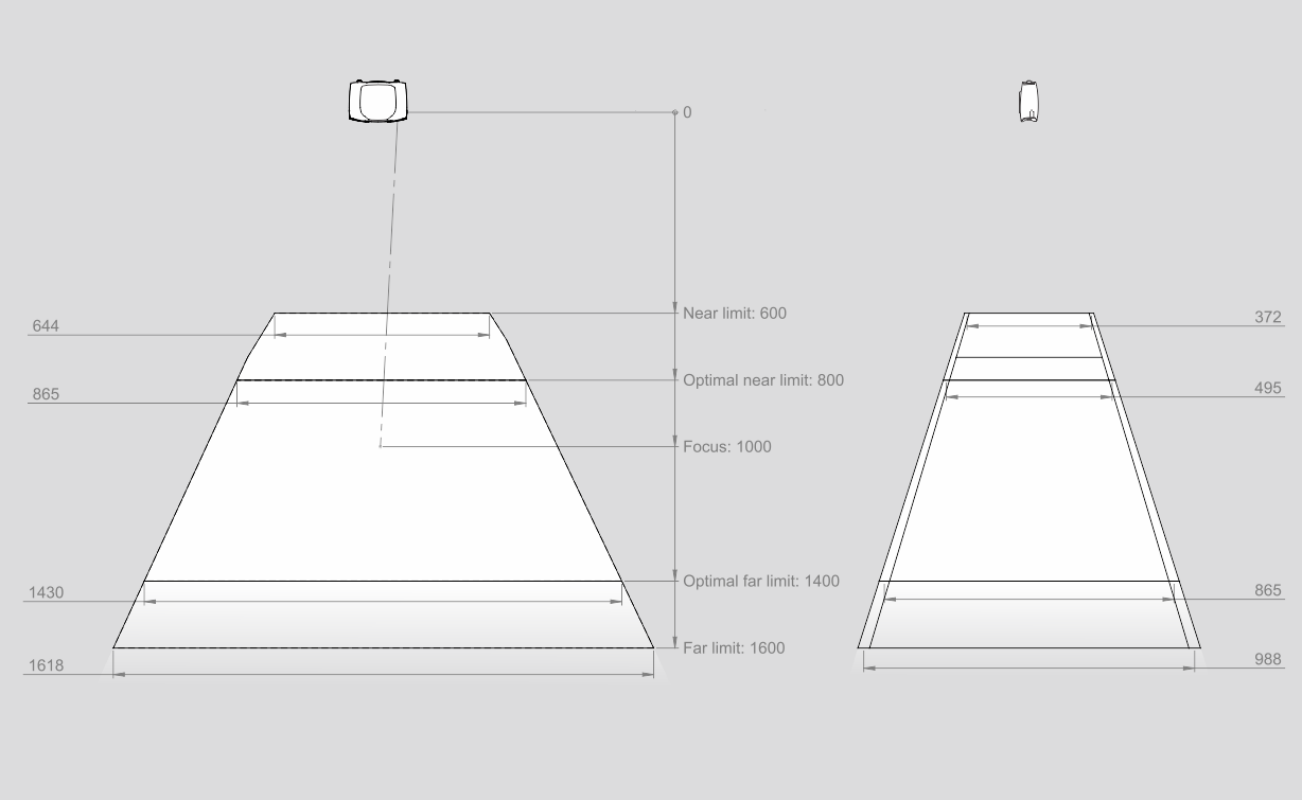
0
644
Near limit: 600
865
Optimal near limit: 800
Focus: 1000
1430
Optimal far limit: 1400
1618
Far limit: 1600
372
495
865
988

CAD model information

The datum reference of the Zivid 2 CAD models is at the center of the Ø5 positioning hole (B in the image below).



The Optical Center Label is found relative to the datum reference.

4.2. Mechanical Interface

This page covers the mechanical dimensions, mounting holes, mounting specifications, and mounting-surface flatness requirements for each Zivid camera.

Zivid 3

Dimensions

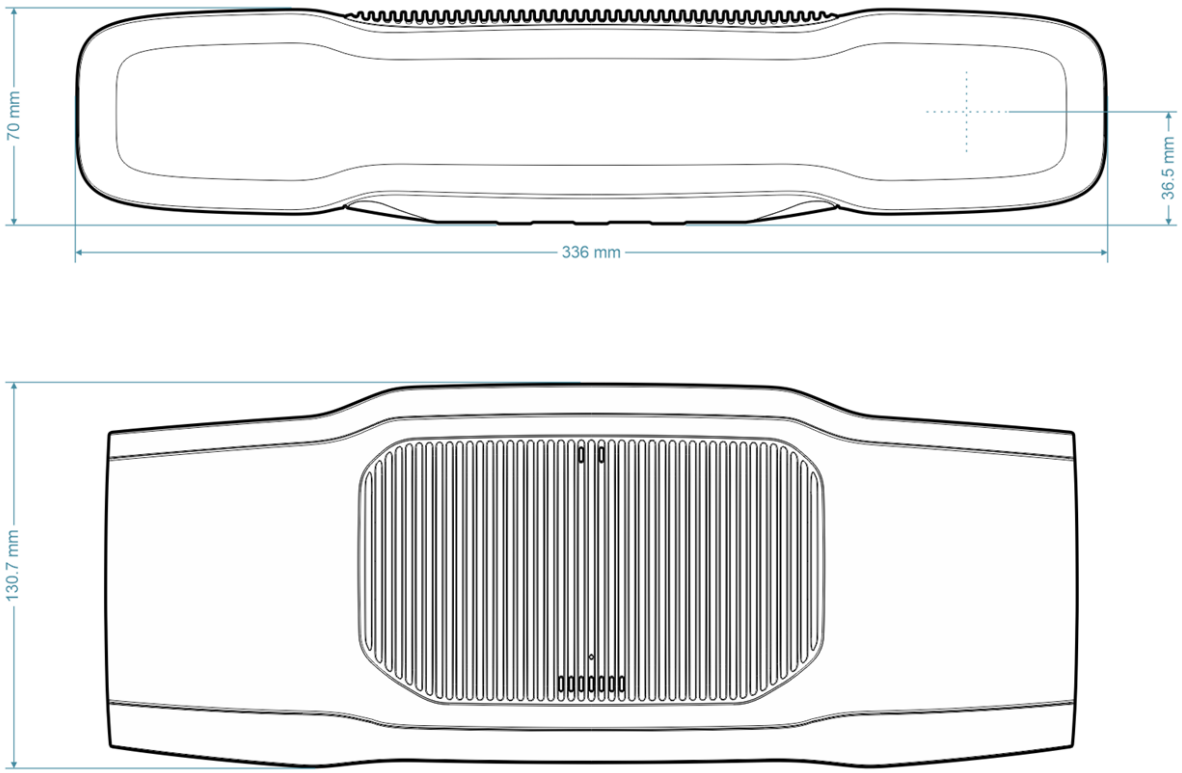

Mounting Specifications

Zivid cameras have three M5 mounting holes, one Ø5 positioning hole, and one Ø5x1 obround (a shape consisting of two semicircles connected by parallel lines tangent to their endpoints) alignment hole. We recommend using DIN 912 / ISO 4762 Hexagon or ISO 14579 Hexalobular socket head cap screws in stainless steel (A2 or A4). To ensure not damaging the threads, we recommend not exceeding the specified maximum torque value when fastening the screws.

Zivid 3 also has a tripod mount hole (UNC 1/4”-20).



Mounting Holes

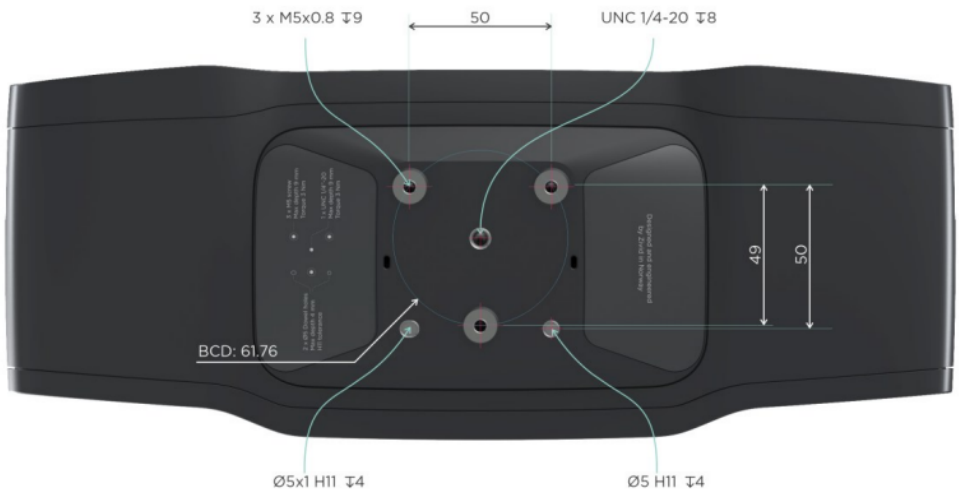

Flatness of Mounting Surface

For optimal performance we recommend a mounting surface flatness of ±0,05 mm or better. Mounting the camera to an uneven surface can in some cases affect the calibration.

We recommend using one of the Zivid Camera Mounts to ensure problem free installation of the camera.



Zivid 2+

Dimensions

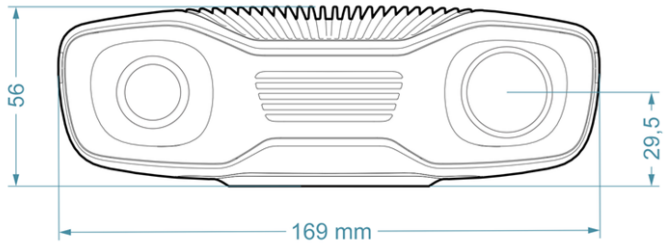

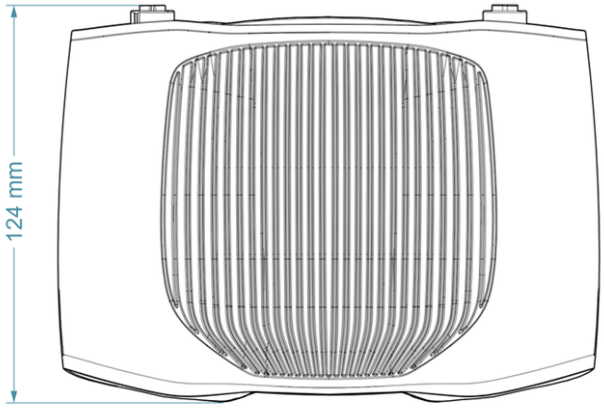

Mounting Specifications

Zivid cameras have three M5 mounting holes, one Ø5 positioning hole, and one Ø5x1 obround (a shape consisting of two semicircles connected by parallel lines tangent to their endpoints) alignment hole. We recommend using DIN 912 / ISO 4762 Hexagon or ISO 14579 Hexalobular socket head cap screws in stainless steel (A2 or A4). To ensure not damaging the threads, we recommend not exceeding the specified maximum torque value when fastening the screws.

The Zivid 2+ camera does not have a tripod mount hole, but you can use our Tripod Adapter.



Mounting Holes

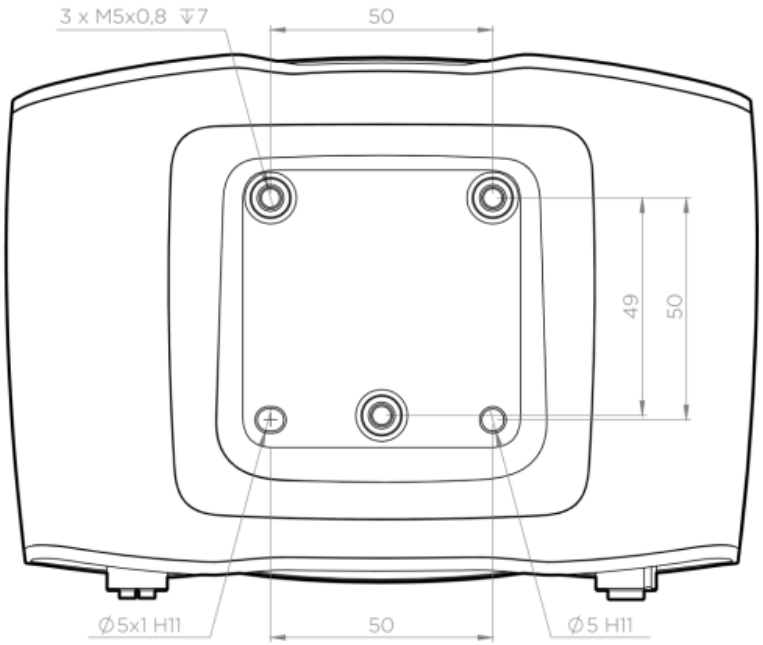

Flatness of Mounting Surface

For optimal performance we recommend a mounting surface flatness of ±0,05 mm or better. Mounting the camera to an uneven surface can in some cases affect the calibration.

We recommend using one of the Zivid Camera Mounts to ensure problem free installation of the camera.



Zivid 2

Dimensions

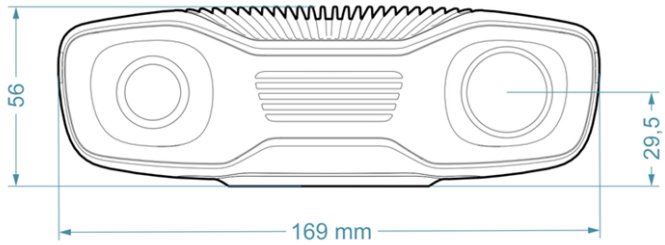

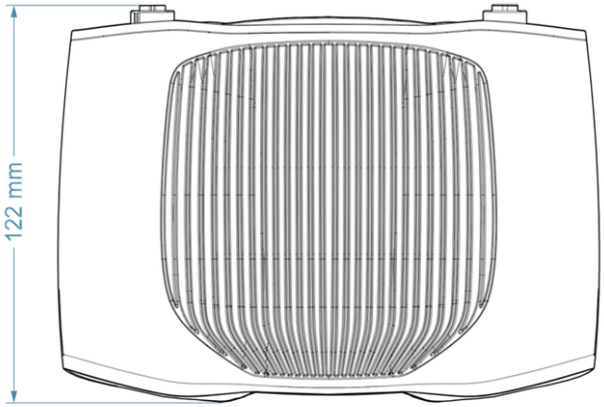

Mounting Specifications

Zivid cameras have three M5 mounting holes, one Ø5 positioning hole, and one Ø5x1 obround (a shape consisting of two semicircles connected by parallel lines tangent to their endpoints) alignment hole. We recommend using DIN 912 / ISO 4762 Hexagon or ISO 14579 Hexalobular socket head cap screws in stainless steel (A2 or A4). To ensure not damaging the threads, we recommend not exceeding the specified maximum torque value when fastening the screws.

The Zivid 2 camera does not have a tripod mount hole, but you can use our Tripod Adapter.



Mounting Holes

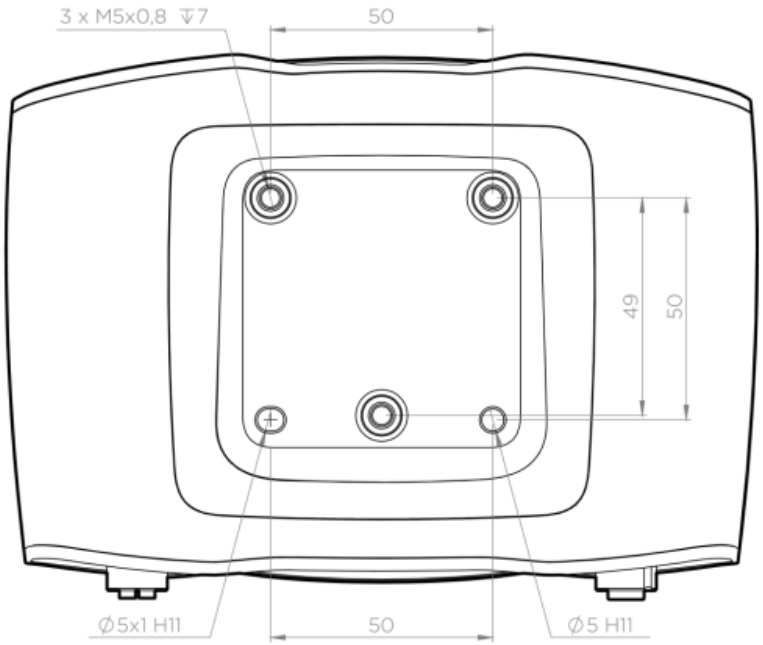

Flatness of Mounting Surface

For optimal performance we recommend a mounting surface flatness of ±0,05 mm or better. Mounting the camera to an uneven surface can in some cases affect the calibration.

We recommend using one of the Zivid Camera Mounts to ensure problem free installation of the camera.



4.3. Mounting

Zivid cameras can be mounted stationary, on a robot arm, or on a tripod; each page covers mounting accessories and guidelines for that option.

Note

The camera must be completely still during the acquisition to deliver the specified 3D image quality. Outside of acquisition, it is completely safe to move it, e.g. when mounted on a robot or any other moving platform.

Mounting Accessories

Mounting accessories can be ordered at shop.zivid.com.



4.4. Positioning Correctly

This page covers general camera positioning guidelines, plus specific guidance for bin-picking and surface-imaging applications, and cooling clearance and signal protection requirements for Zivid cameras.

Mounting the camera straight above the scene is most common and recommended.

It is especially beneficial for imaging transparent objects and surfaces that are both specular and dark. Here you will benefit from mounting the camera perpendicular to the object to maximize the signal back to the camera.

The 2D camera and the projector have an angle with respect to the center axis. Consider this if you want the camera perpendicular to the scene.

Zivid 3

XL250

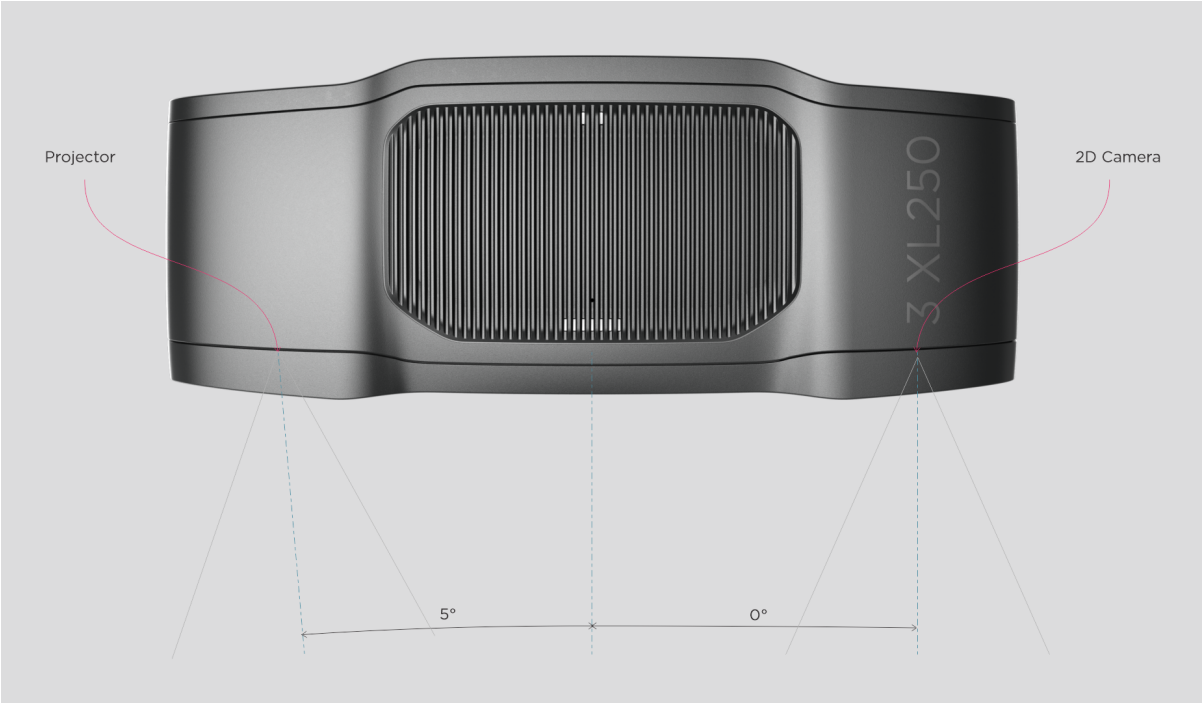

Zivid 2+

MR130/M130

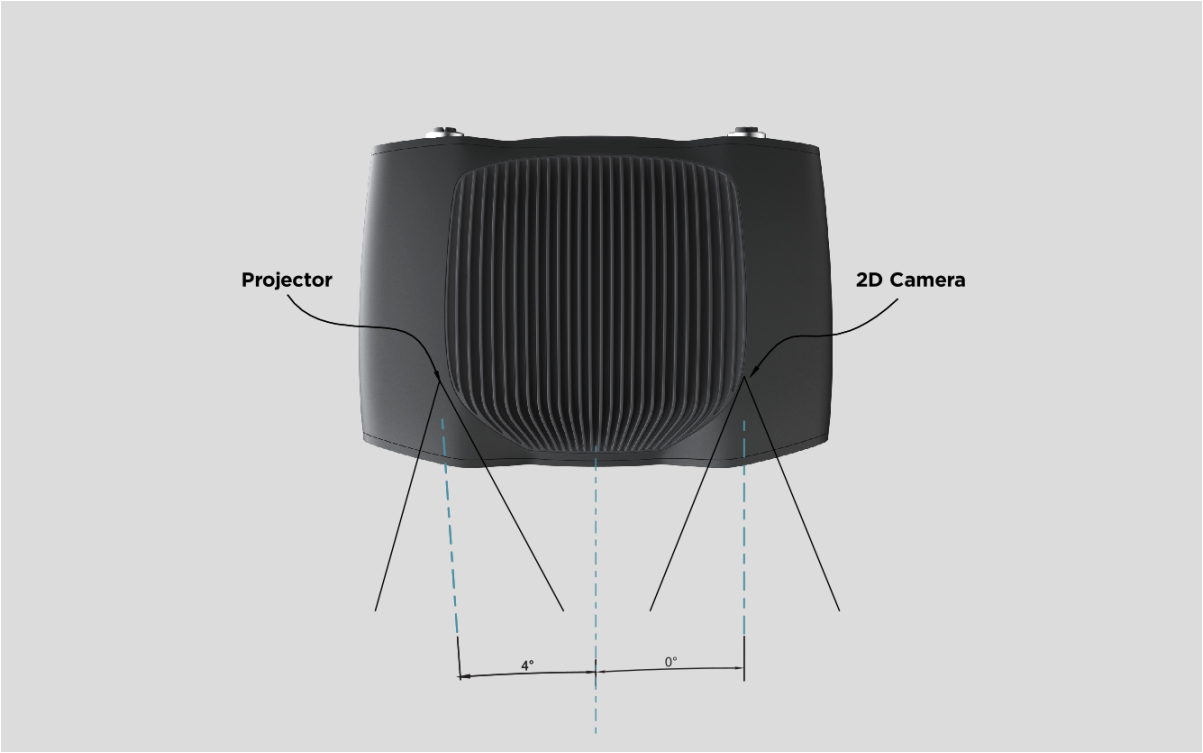

LR110/L110

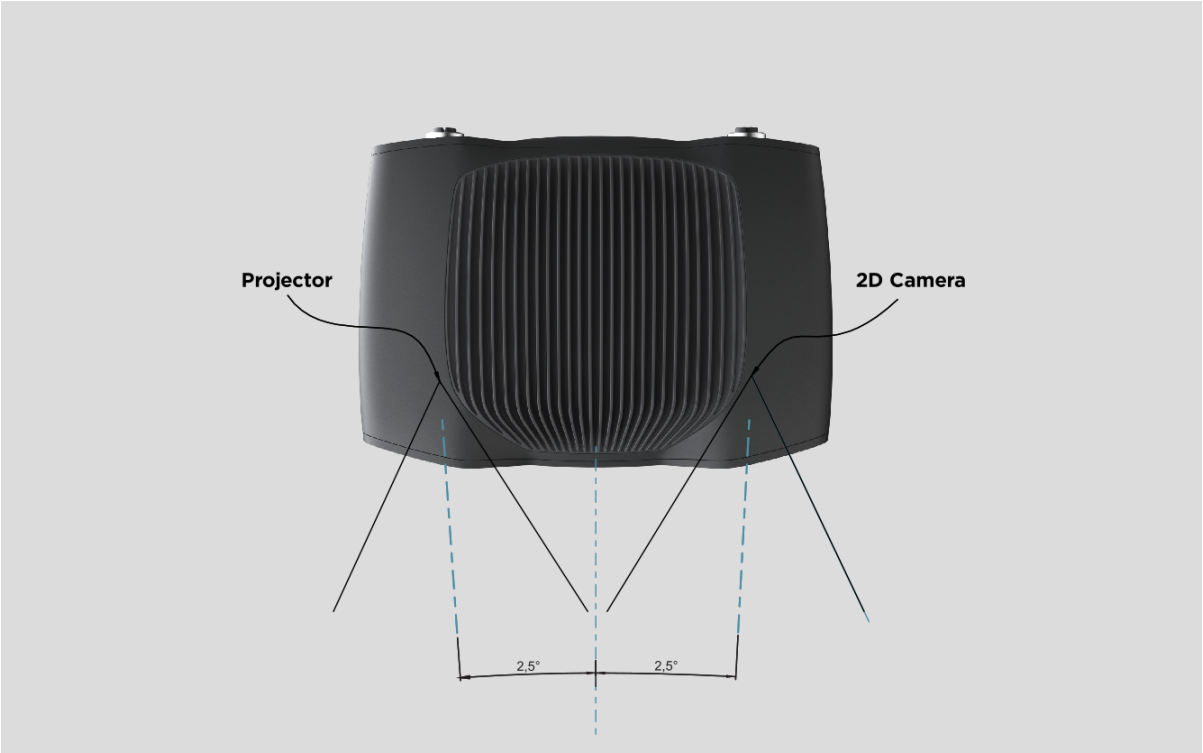

MR60/M60

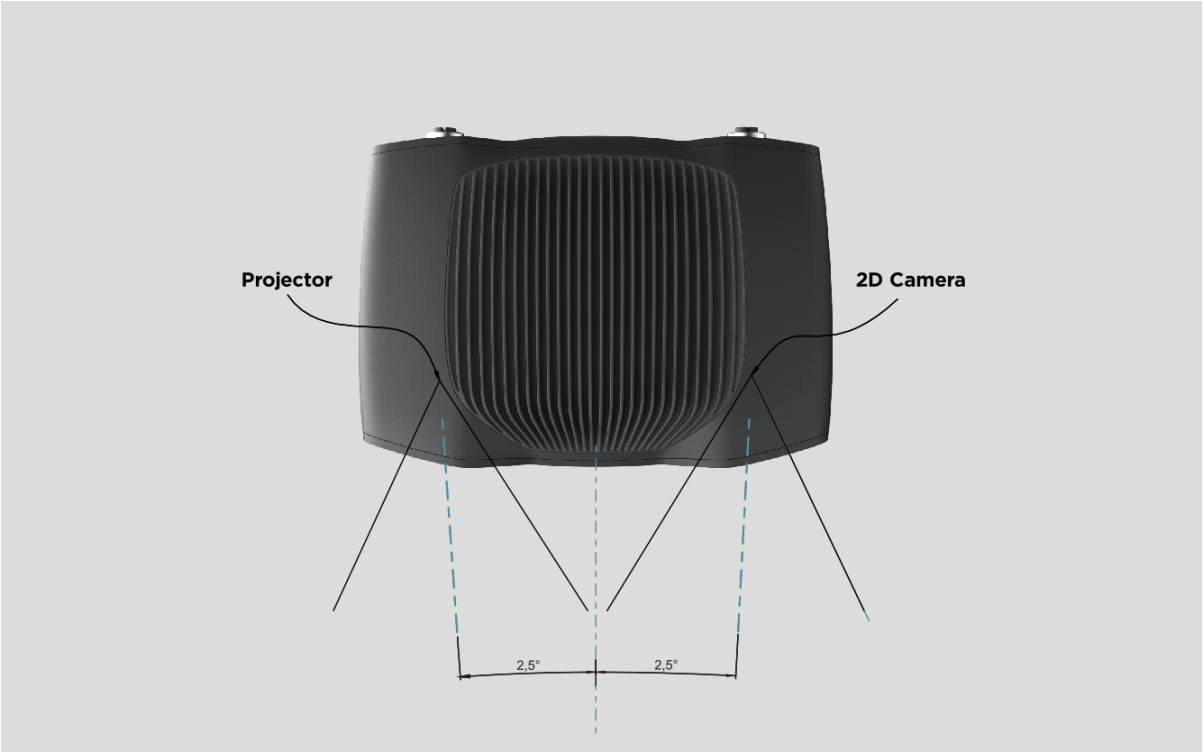

Zivid 2

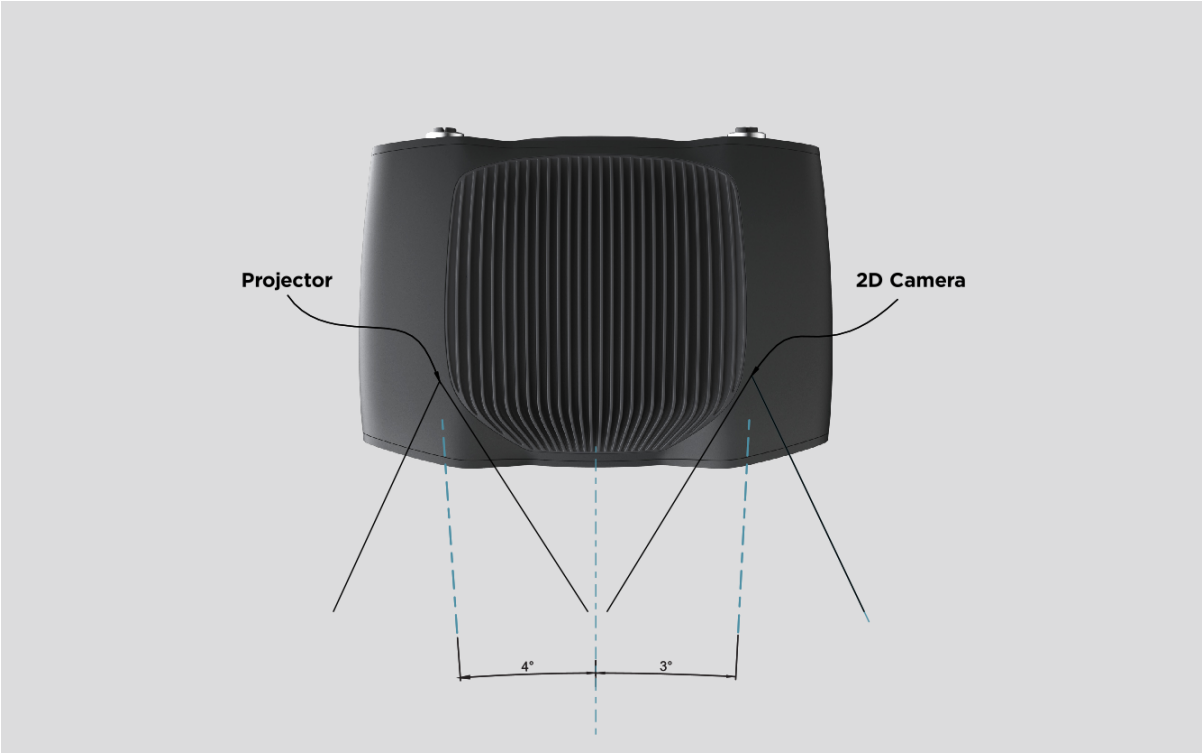

In bin-picking applications

In presence of strong interreflections from the bin walls, you can place the Zivid camera projector above the back edge or above the rear corner of the bin (see images below). Pan and tilt it so that the 2D camera is looking at the center of the bin. Keep the projector rays off the inner surfaces of the two walls closest to the projector; keep the rays almost parallel to those two walls.

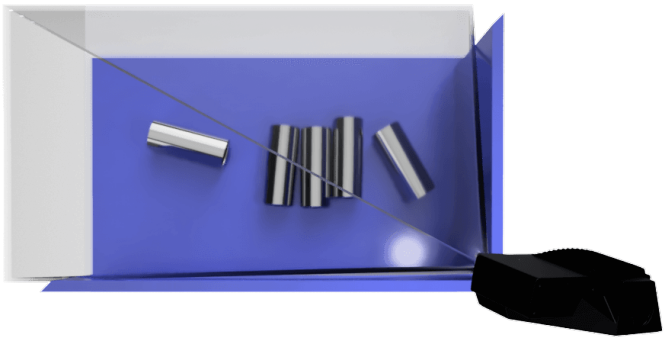



Mounting the camera this way minimizes interreflections from the bin walls, and also frees up space above the scene for easier access for tools and robots.

Zivid cameras do not need any additional light source; the projector provides all the illumination required for both 2D and 3D. A strong and focused light, such as a spotlight mounted right above the bin, can reflect directly into the camera, saturating the sensor and causing blooming in the 2D image. Avoid mounting the camera where it looks straight into such a reflection. To minimize this, remove the extra light if it is not needed, or try slightly moving or tilting the camera. For more on capturing in these conditions, see Dealing With Strong Ambient Light.

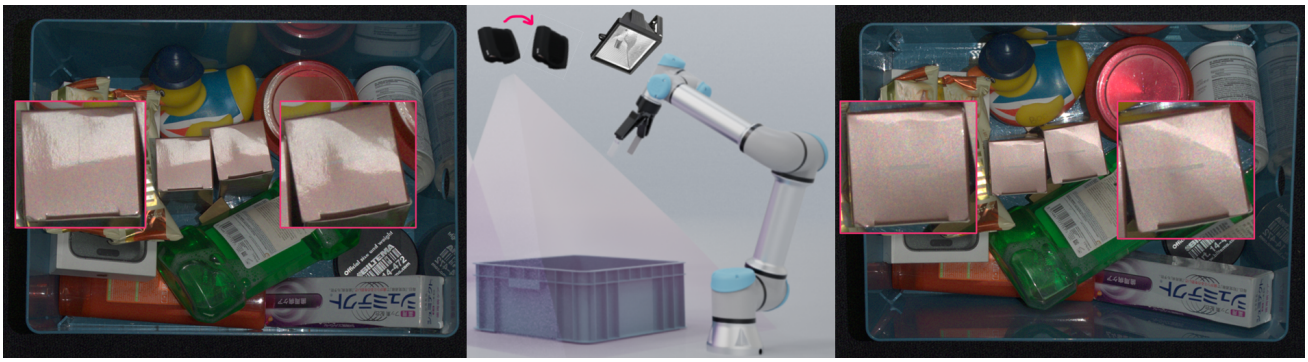

In surface imaging applications

For highly reflective surfaces, direct reflections from the light source, whether from the camera projector or an external light, can create unwanted highlights in the 2D image. To minimize these reflections, mount the camera at a slight tilt angle so that the reflected light is directed away from the camera's field of view. Adjusting the position of the light source or using diffused lighting can also reduce glare.

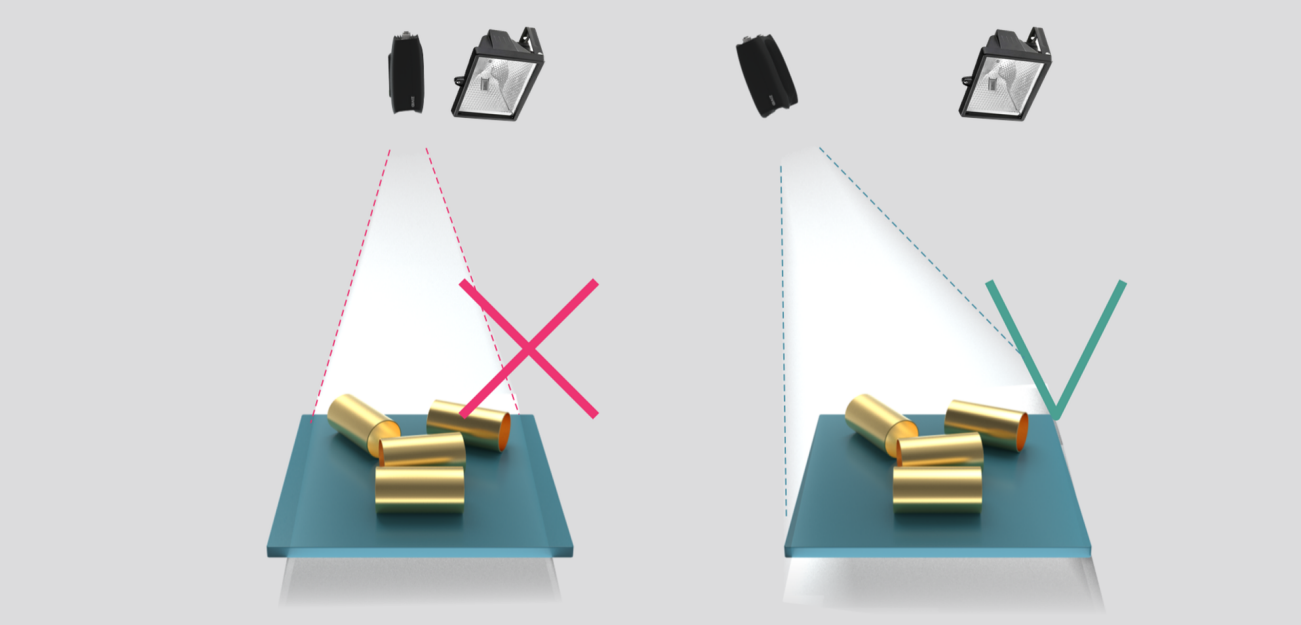

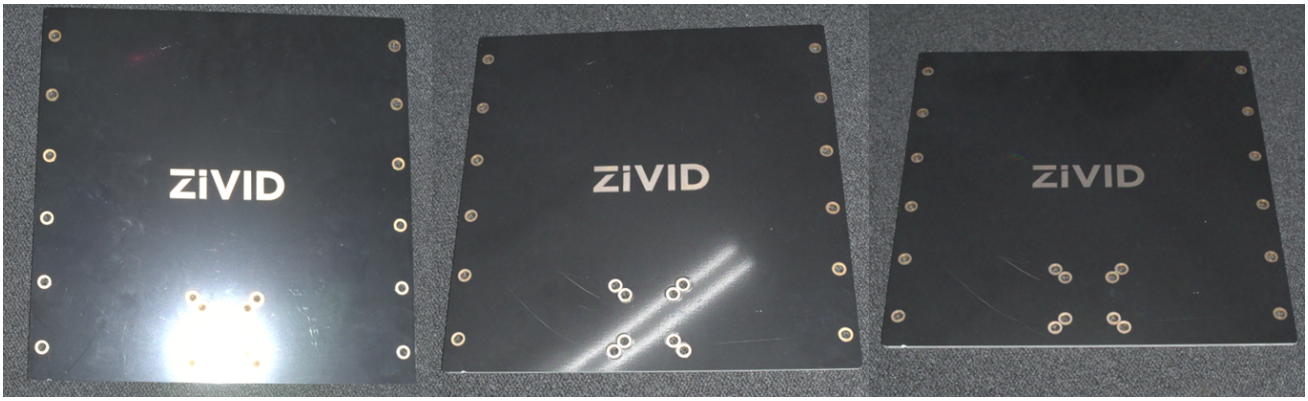

2D image with highlights from the projector (left), ambient light (center), and no highlights (right) depending on the camera position and angle.

Cooling clearance

Zivid cameras use active and passive cooling, allow some space around the device for airflow, and do not block the air opening on its front and rear sides. See the datasheets for the operating temperature range for your camera.

Signal protection

Do not install Zivid cameras and cables next to high voltage devices that can generate high levels of electromagnetic disturbance. Do not route camera cabling through the same trunks/ conduits with AC power cables and cables emitting high levels of disturbance.

5. Connectivity and Power Supply

Zivid cameras connect to power and to your computer via two M12 connectors: a power connector and an Ethernet connector.

5.1. Connectors

Zivid 3

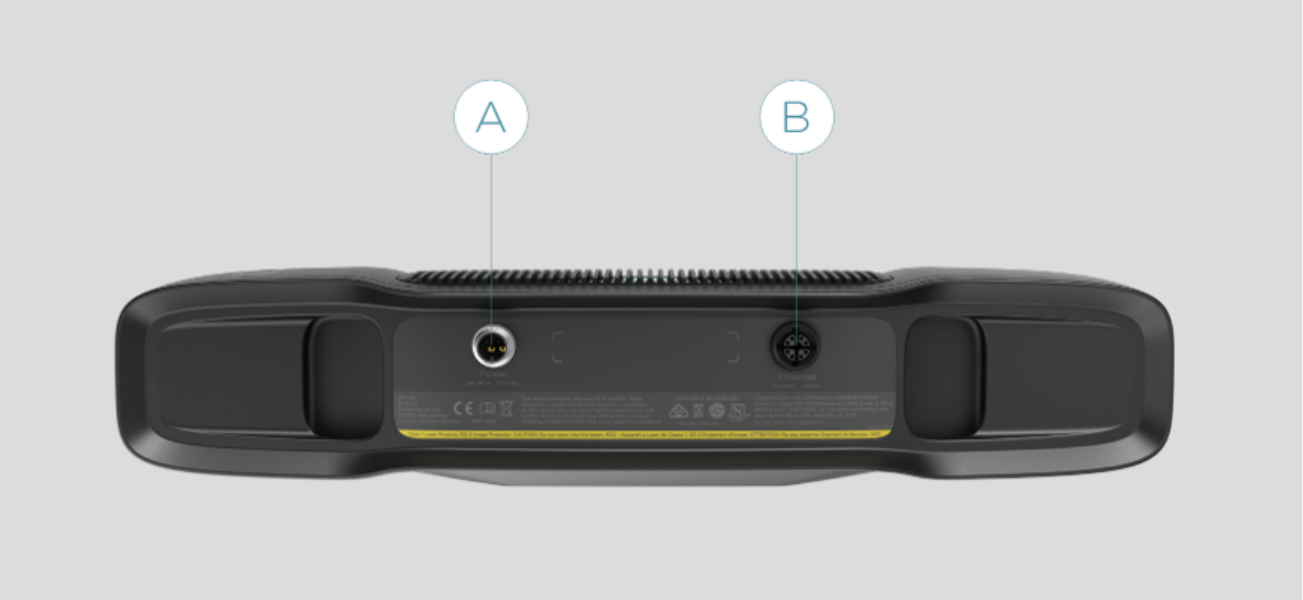

A. M12-5: Power Connector 24V, 5A DC
B. M12X: Ethernet Connector CAT 6A

Check Zivid Approved Ethernet Cables for more information.

Zivid 2+

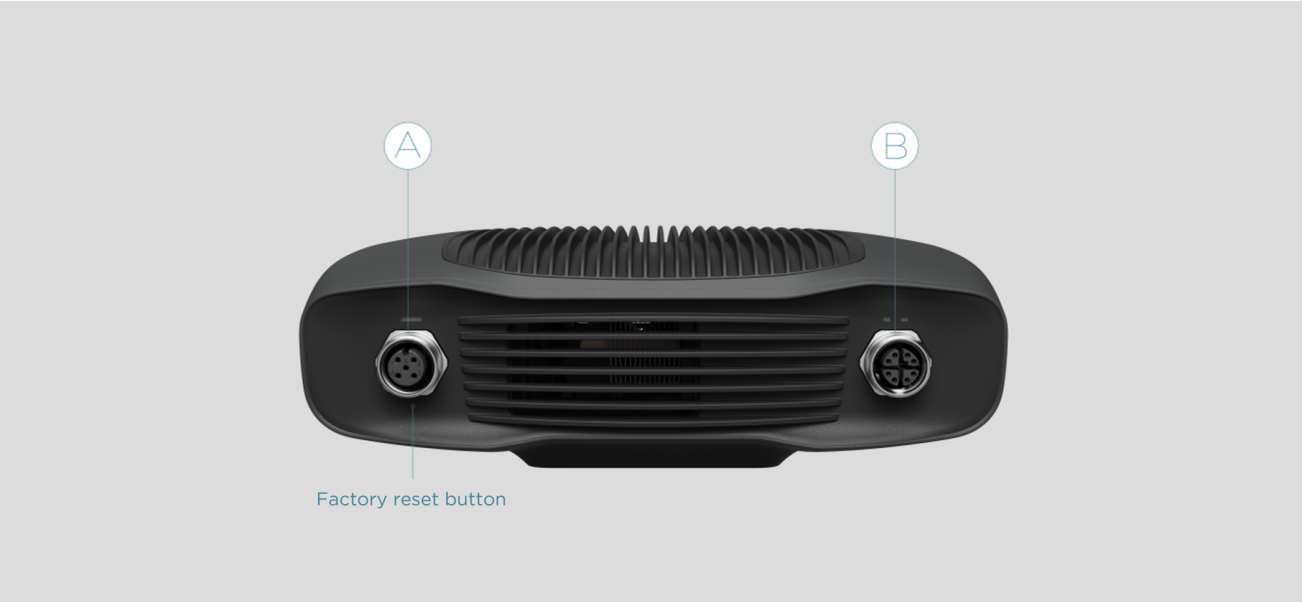

A. M12-5: Power Connector 24V, 5A DC
B. M12X: Ethernet Connector CAT 6A

Check Zivid Approved Ethernet Cables for more information.

For the factory reset button, see Factory Reset Button Zivid Two.

Zivid 2

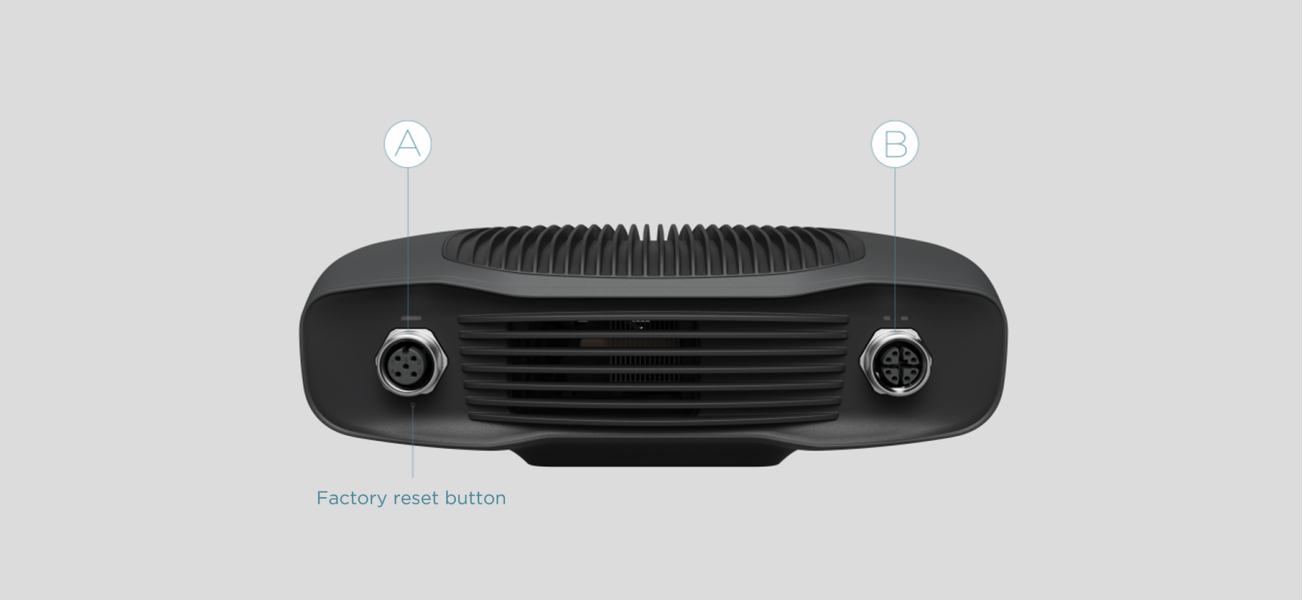

A. M12-5: Power Connector 24V, 5A DC
B. M12X: Ethernet Connector CAT 6A

Check Zivid Approved Ethernet Cables for more information.

For the factory reset button, see Factory Reset Button Zivid Two.

Power supply interface



It is required to use both pins for 24V and for GND.

Zivid 3: optional mating connector TE Connectivity AMP, 1838274-3 (Digikey: A97642-ND).

Zivid 2+ and Zivid 2: optional mating connector TE Connectivity AMP, 1838275-3 (Digikey: A97645-ND).

⚠ Warning

Power supplies or cables that do not meet the specified requirements can damage the camera and void the warranty, particularly when using third-party or custom solutions. See Approved Power Supply And Power Cables for more information.

Data cable

Zivid camera uses a dedicated ethernet cable for data transmission. See Zivid Approved Ethernet Cables for more information.

The table below provides the Zivid Ethernet cable pinout.

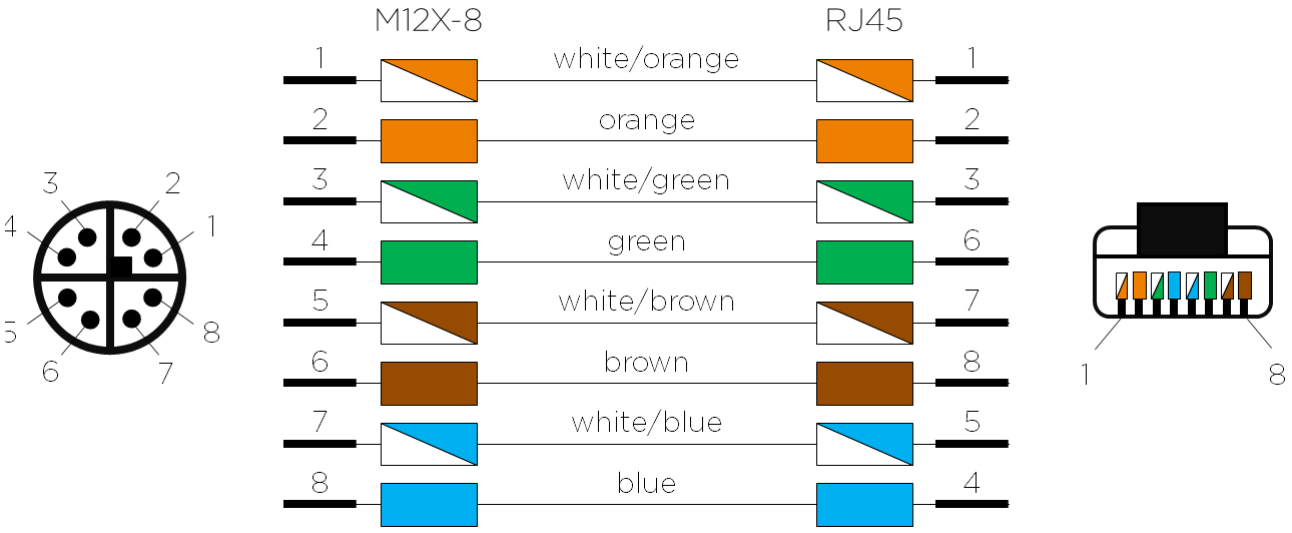

5.2. Connecting to the computer

To connect the camera, plug in power first, then the Ethernet cable to your computer.

- Plug the power supply into the camera's power connector ("24V").
- Plug the Ethernet cable into the camera and connect it to your computer.
- Plug the power supply into a power outlet.

Note

On disconnect, follow the procedure in reverse, disconnect mains power first.

Ensure that all connections are screwed in tightly. The coupling nut of the M12 screw connectors can in some cases be hard to screw in. However, when installed correctly they provide a reliable connection.

Check System Requirements for performance considerations and review performance by observing the status Indication LEDs.

Use the AC/DC adapter supplied with the unit to ensure compliance with emission and immunity standards.

The Zivid camera is protected against reverse polarity and against overheating by a thermistor that physically removes the power.

The Zivid camera uses Ethernet communication and needs 10 Gbps for best performance. Not all computers have a port for 10 Gigabit Ethernet. In that case, you can connect to it using an adaptor for 10GBASE-T (10 Gbps copper Ethernet) to Thunderbolt 3. At a reduced performance you can also use 1000BASE-T and NBASE-T (1 Gbps, 2.5 Gbps, and 5 Gbps over copper) to USB adapters.

Recommended network cards and adapters

We have successfully tested and recommend the following hardware:

- ASUS XG-C100C 10G Network Adapter PCI-E x4 Card.
- QNAP QNA series Thunderbolt 3 to 10GbE Adapter.

⚠ Caution

USB-based network adapters have reduced and more variable capture speed, and can occasionally give errors when using the camera. Our recommendation is to use 10Gb PCI Express cards for optimal performance.

⚠ Warning

Use only Zivid approved Ethernet cables.

Network Topology

Direct connection

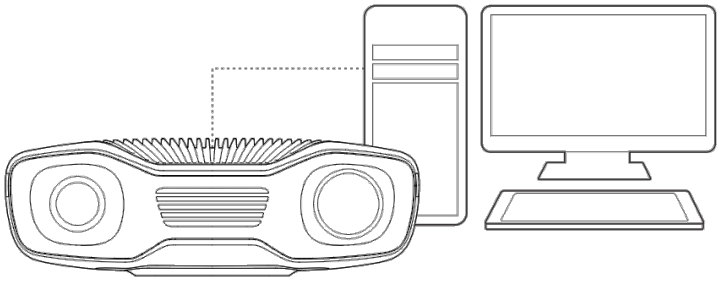

Connection via switch

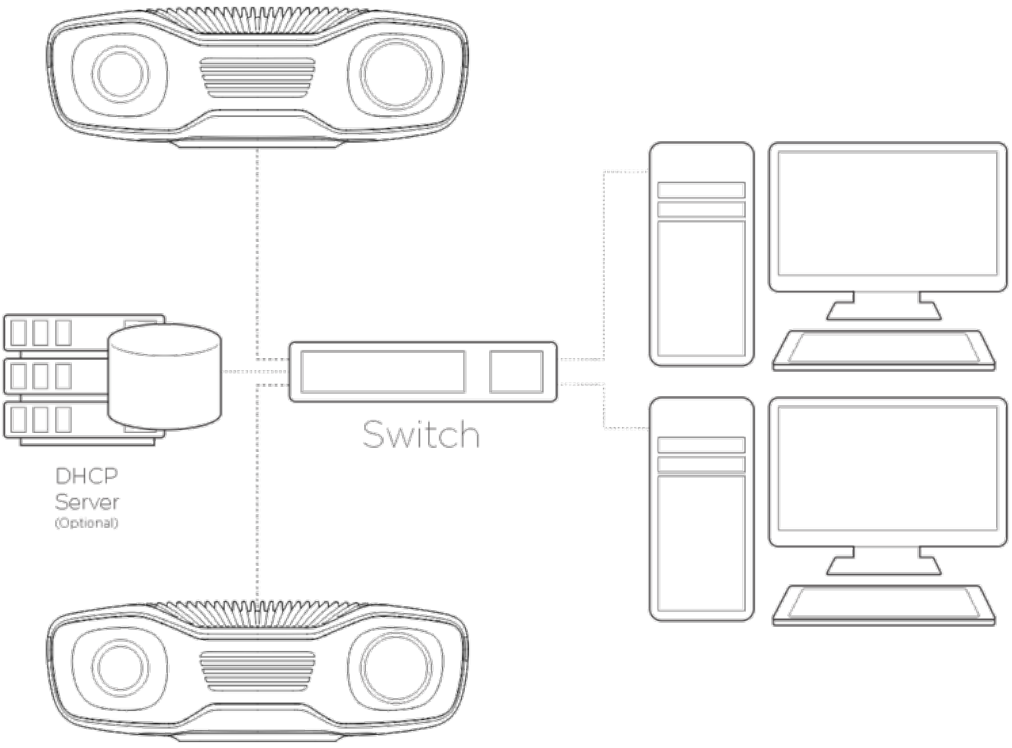

6. Support

For more information, visit:

support.zivid.com

The Zivid Knowledge Base offers solutions to frequently encountered issues and questions concerning Zivid products, encompassing both software and hardware aspects. Additionally, you'll discover comprehensive articles exploring our camera technology, best practices, and various 3D imaging techniques, including structured light. These resources aim to enhance your understanding and utilization of our product.

7. Service and Maintenance

Regularly check screw connections, clean the optical glass and heat sink, and re-run infield correction yearly to keep a Zivid camera well maintained. The device contains no user-serviceable parts inside, and the product warranty will be void if opened.

⚠ Caution

As with any bright light, do not stare into the beam.

- Check screw connections and connectors at regular intervals.
- Do not block the air opening on the front and rear sides of the product.
- The unit uses active and passive cooling, allow some space around the device for airflow.
- Regularly clean the optical glass, the heat sink and air openings, and the fan, as described in Cleaning Instructions. Do not spin the fan faster than its normal running speed with compressed air.
- Check and update the calibration on a yearly basis by performing Infield Correction (and Hand Eye) when necessary.

8. About Zivid

Zivid is a market-leading provider of 3D machine vision cameras and software for next generation robotics and industrial automation systems. Its Zivid 3, Zivid 2+, and Zivid 2 products are regarded as the world's most accurate real-time 3D color cameras and bring human-like vision to the smart factories and warehouses of Industry 4.0.

To find out more about Zivid, visit:

www.zivid.com



E-mail

Technical support: customersuccess@zivid.com
Sales: sales@zivid.com
General: info@zivid.com

Phone

Zivid HQ-Oslo, NO | +47 21 02 24 72
Zivid Sales-Karlsruhe , DE | +49 151 55 646 385
Zivid Sales-Boston, MA, US | +1 (857) 523-0235
Zivid Sales-Xiamen, CN | +86 139 5012 9074
Zivid Sales-Seoul, KR | +82 10 8984 5350
Zivid Sales-Tokyo, JP | +81 80-2157-3691

Zivid AS
Gjerdrums vei 10A
0484
Oslo, Norway



Copyright 2015-2026 (C) Zivid AS