DIRECTFIT™

Auto Lift Repair Parts and Accessories for Mohawk Lifts

Automotive Shop Equipment | Auto Lift Repair Parts

The Industry's Largest Selection of Auto Lift Repair Parts

DIRECTFIT™
SVI's Direct Fit™ Brand

Call about bolt-on overhead limit shut-off solutions for Mohawk lifts.

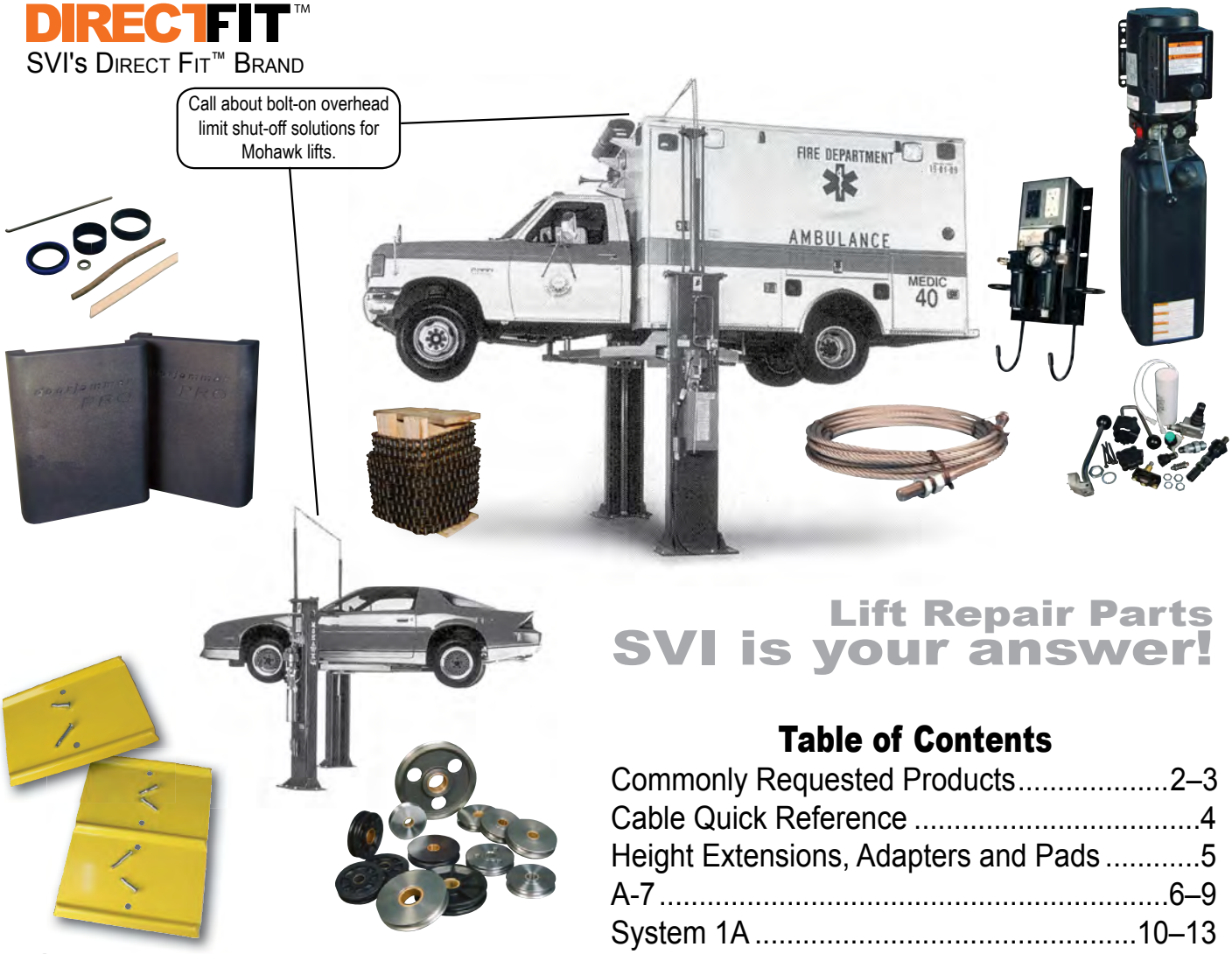

Lift Repair Parts
SVI is your answer!

Table of Contents

Commonly Requested Products.....2–3
Cable Quick Reference 4
Height Extensions, Adapters and Pads 5
A-7 6–9
System 1A 10–13
LMF-12 14–16
TP-15.....14–16
Power Units 17
DoorJammerPRO™ Door Protector.....18
Turf Trays for 2-Post Lifts 19
More from SVI 20

SVI International, Inc.
155 Harvestore Drive • DeKalb, IL 60115

800-321-8173
815-748-0200
www.sviinternational.com

Entire contents copyright © 2021 SVI International, Inc.

SVI's Product Line is Vast

CONTACT US TODAY IF THERE'S SOMETHING YOU CAN'T FIND

800-321-8173 • 815-748-0200 • www.sviinternational.com



Shims for 3/4" Wedge and Screw Anchors

Color Coded Shims are In-Stock! Order Today!

BH-7512-92	**Assortment**	**150 Shims (50 each)**
BH-7512-90	**1/16" Blue**	**Pack of 50**
BH-7512-91	**1/8" Red**	**Pack of 50**
BH-7512-89	**1/4" Black**	**Pack of 50**

HEAVY DUTY PLASTIC SLOTTED SHIMS

Extra-thick shims make it easy to level and align 2- and 4-post surface mount lifts. These rugged plastic shims will not corrode, rot or rust. A must-have for every professional lift installer in the industry.



Installation Kits Available

Installation Supplies

- Carbide Drill Bits
- Core Bits
- Epoxy and Adhesives
- Wedge Anchors
- Screw Anchors
- Rebar Cutters and Adapter
- Rod Seal Install Tools
- Safety & Inspection Stickers

Many Sizes Available!



Simpson Carbide Drill Bits *Many Options and Sizes Available!*

BH-7064Q-12-21 (Drilling Depth 16" / 3/4" dia.) **SDS Max Quad Head Bit**

BH-7065Q-12-23 (Drilling Depth 18" / 3/4" dia.) **Spline Shank Quad Head Bit**

BH-7065Q-12-16 (Drilling Depth 11" / 3/4" dia.) **Spline Shank Quad Head Bit**



Wedge Anchors
Many Sizes Available!
BH-7075-03
3/4" x 5-1/2"

Ask How to Get Free Shipping on Wedge Anchors!



Screw Anchors
Many Sizes Available!

BH-7075-26
1/2" x 4"

BH-7075-37
3/4" x 5"



Rod Seal Install Tool Set
BH-7079-01
Includes 3 Install Tools to Service 3/4" ID Seals up to 3" ID Seals



Inspection Stickers
Roll of 250
BH-7011-11

ASK FOR OUR INSTALLATION SUPPLIES CATALOG



Wheel / Tire Hanger Kits

Increase Efficiency • For Any Budget



BH-7545-70K-4 Kit of 4
BH-7545-70K Individual
Includes Hardware

SF-92100
Set of 2

Air / Hydraulic Pumps for Rolling Bridge Jacks

Options Available—Call Today!



power station™



POWER STATION™ AIR / ELECTRIC UTILITY BOX
4 Colors Available

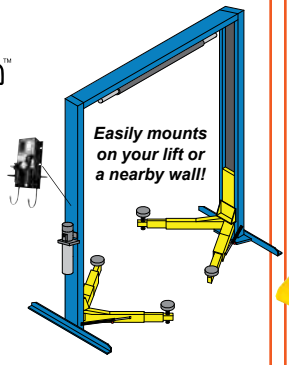

Vehicle Lifts and Lifting Equipment

New Lifts for Cars, Trucks, Buses, Motorcycles, UTVs and More

Replacement Cylinders Sections & Kits • Turf Trays for 2-Post Lifts



All names, numbers, symbols and descriptions are used for reference purposes only. It is not implied that any part listed is the product of these manufacturers. SVI does not represent and is not associated in any way with any other companies.

Entire contents copyright © 2021 SVI International, Inc.

SVI's Product Line is Vast

CONTACT US TODAY IF THERE'S SOMETHING YOU CAN'T FIND

800-321-8173 • 815-748-0200 • www.sviinternational.com

INCREASE EFFICIENCY • ELIMINATE COSTLY DAMAGE TO DOORS • REDUCE STRESS OF SHOP TECHNICIANS

doorjammerPRO™
Durable • Impact Resistant

A Must-Have for All 2-Post Lifts!

Available in 2 Sizes!

BH-7077-02-2S	12" tall x 18" wide
BH-7077-02-2	24" tall x 18" wide

Prevents Door Dings!
Just one damaged door can cost ***3 times as much*** as a simple investment in one SVI doorjammerPRO™.





Auto Lift Cables and Chain

Sheaves / Pulleys / Chain Rollers



TURF AND UTILITY TRAYS

FOR 2-POST LIFTS
SYMMETRIC / ASYMMETRIC

The #1 Choice for Symmetric or Asymmetric 2-Post Surface Mount Lifts and In-Ground Side-By-Side, too!





Hose Reel Hose Stops

Options Available—Call Today!

Auto Lift Power Units and Parts

Call SVI today!







Tire Changer Parts and Accessories

For Most Makes and Models

See our Tire Changer Repair Parts Catalog!



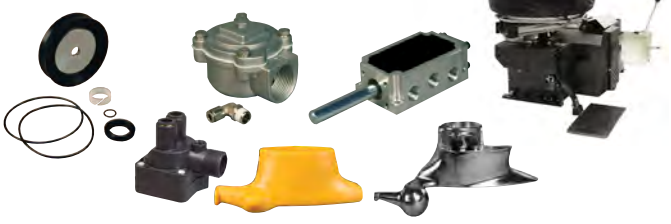

Brake Lathe Repair Parts

For Most Makes and Models

See our Brake Lathe Repair Parts Catalog!



RELS

All names, numbers, symbols and descriptions are used for reference purposes only. It is not implied that any part listed is the product of these manufacturers. SVI does not represent and is not associated in any way with any other companies.

Entire contents copyright © 2021 SVI International, Inc.

Cable Quick Reference for Mohawk Lifts

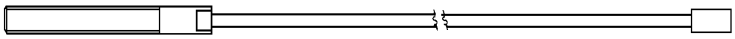

DIRECTFIT™
SVI's Direct Fit™ Brand

CABLES FOR 2-POST LIFTS

Also see SVI's Cable Reference Book

Many standard and custom cables available! Don't see your cable? Call today!

SVI Part #	Cross Ref #	O.A.L.	Dia.	Fits Lift Models
BH-7200-05	50573982	27' 3"	.436"	TP-7
BH-7200-09	50563981	25' 11"	.436"	TP-55

CABLES FOR 4-POST LIFTS

Don't see your cable? Call today!

SVI Part #	Cross Ref #	O.A.L.	Dia.	Fits Lift Models
BH-7343-01		40' 4-1/8"	9/16"	FPOB-235 - Left Front (LF)
BH-7343-02		21' 8-1/8"	9/16"	FPOB-235 - Left Rear (LR)
BH-7343-03		17' 4-1/8"	9/16"	FPOB-235 - Right Rear (RR)
BH-7343-04		36' 1/8"	9/16"	FPOB-235 - Right Front (RF)
BH-7343-05	1-0128	35' 4-1/8"	9/16"	FPOB-205 - Left Front (LF)
BH-7343-06	1-0129	19' 2-1/8"	9/16"	FPOB-205 - Left Rear (LR)
BH-7343-07	1-0130	14' 10-1/8"	9/16"	FPOB-205 - Right Rear (RR)
BH-7343-08	1-0131	31' 1/8"	9/16"	FPOB-205 - Right Front (RF)
BH-7343-09	1-0174	30' 4-1/8"	9/16"	FPOB-175 - Left Front (LF)
BH-7343-10	1-0175	12' 4-1/8"	9/16"	FPOB-175 - Left Rear (LR)
BH-7343-11	1-0176	26' 3-1/8"	9/16"	FPOB-175 - Right Rear (RR)
BH-7343-12	1-0177	30' 8"	9/16"	FPOB-175 - Right Front (RF)

MANY MORE CABLES AVAILABLE

Also see SVI's Cable Reference Book

SVI Specializes in Standard and Custom Cables



For specially made cables or any cables that require clarification, fill out our Cable Worksheet.

SVI's here to help! Call 800-321-8173 • Fax: 800-899-1784



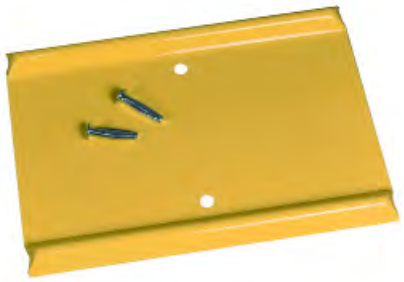

WIDEN YOUR RANGE!

With extra wide single and dual wheel spotter dishes exclusively from SVI. Our wheel spotters are stamped from heavy gauge steel then powder coated and shipped with installation hardware. Each spotter is a ***full 15" wide*** to provide safe spotting for both wide and narrow wheelbase vehicles.

BH-9701 • Single Wheel Spotter Dish 10-3/4" x 15"

BH-9702 • Dual Wheel Spotter Dish 20-1/8" x 15"

All names, numbers, symbols and descriptions are used for reference purposes only. It is not implied that any part listed is the product of these manufacturers. SVI does not represent and is not associated in any way with any other companies.

Entire contents copyright © 2021 SVI International, Inc.

Height Extensions, Adapters and Pads for Mohawk Lifts

Please always confirm dimensions before ordering. Height Extensions and Adapters come in many different styles and dimensions. SVI is well-known as the adapter expert, specializing in top quality standard and custom adapters. SVI is your answer.

Need an Adapter, Height Extension, or Rubber Pads, Call SVI. Many options available!



For LMF-12 and TP15
Instead of BH-7340-23 (Ref 012-012-047) with Steel Teeth, use this New Version Adapter.
BH-7340-29
Uses Replacement Pad BH-7340-29P



For System 1A
Instead of BH-7341-58 (Ref 025-002-035) with Steel Teeth, use this New Version Adapter.
BH-7340-11
Uses Replacement Pad BH-7101-00



For System 1A
1-1/2" Riser
Gets the adapter up off the arm.
1-1/8" Pin Dia.
BH-7340-40
Uses Replacement Pad BH-7101-00



4" Nesting Height Extension
1-1/8" Pin Dia.
BH-7340-13
Many Other Height Extensions Available!



For TP120
1-3/8" Pin Dia.
BH-7342-60

SVI Part #	OEM Ref	Description	Pin Dimensions
BH-7340-11		Adapter with Rubber Pad	1-1/8" Pin OD x 2-1/4" Long Pin
BH-7340-12	025-002-127	3" Nesting Height Extension	1-1/8" Pin OD x 2-1/4" Long Pin
BH-7340-13		4" Nesting Height Extension	1-1/8" Pin OD x 2-1/4" Long Pin
BH-7340-14		5" Nesting Height Extension	1-1/8" Pin OD x 2-1/4" Long Pin
BH-7340-15	025-002-128	6" Nesting Height Extension	1-1/8" Pin OD x 2-1/4" Long Pin
BH-7340-15BK	025-002-126	Height Extension Bracket	For 1-1/8" Pin Diameters
BH-7340-16		7.5" to 9.5" Adj Nesting Ext	1-3/8" Pin OD x 3-1/8" Long Pin
BH-7340-17	018-000-106	5" Nesting Height Ext LMF/TP-15	1-3/8" Pin OD x 3-1/4" Long Pin
BH-7340-18	012-012-151	7-1/2" Nesting Height Ext LMF/TP-15	1-3/8" Pin OD x 3-1/4" Long Pin
BH-7340-19	018-000-105	10" Nesting Height Ext LMF/TP-15	1-3/8" Pin OD
BH-7340-29		Adapter with Rubber Pad LMF-12 / TP-15	1-3/8" OD x 3-1/4" Long Pin
BH-7340-40		Adapter and Rubber Pad with 1-1/2" Riser	1-1/8" OD x 2-1/4" Long Pin
BH-7342-60	ZZZ1229-P-002	Adapter for TP120	1-3/8" OD x 3-1/4" Long Pin
BH-7340-26P		Rubber Arm Pad - 3" x 4" x 3/8"	
BH-7340-29P		Rubber Arm Pad - 4" x 6" x 3/8"	
BH-7101-00		Rubber Arm Pad - 3-7/8" x 4-7/8" x 7/8"	

TYPE **GMT**
7" Wide Lifting Area

Specialty Lift Adapters for Mohawk

For 2019, 2020 and newer Chevrolet 1500 Silverado and GMC Sierra Truck Models



BH-7340-24GMT

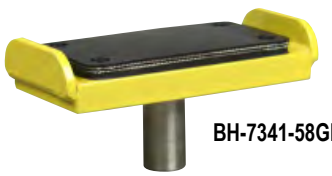

BH-7341-58GMT-1

These GMT Style Adapters Use Replacement Pad BH-7542-75P

SVI Part #	OEM Ref #	Description Uses	
BH-7340-24GMT	012-012-047	Adapter Base and Pad • 1-3/8" Dia. x 3-1/4" Long Pin	For 2019, 2020+ GM Trucks
BH-7341-58GMT		Adapter Base and Pad (Set of 2) • 1-1/8" Pin	For 2019, 2020+ GM Trucks
BH-7341-58GMT-1		Adapter Base and Pad • 1-1/8" Pin x 2-1/4" Long Pin	For 2019, 2020+ GM Trucks
BH-7542-75P		Rubber Pad 3-1/4" x 6" (1 Pad)	For 2019, 2020+ GM Trucks
BH-7542-75P-4		Rubber Pad 3-1/4" x 6" (Set of 4)	For 2019, 2020+ GM Trucks

All names, numbers, symbols and descriptions are used for reference purposes only. It is not implied that any part listed is the product of these manufacturers. SVI does not represent and is not associated in any way with any other companies.

Entire contents copyright © 2021 SVI International, Inc.

Parts for Model A-7

Power Unit Column or Mainside

Item	SVI P/N	Ref OE#	Description
1	BH-7341-22	601-300-045	Power Unit
2	BH-7340-51	601-410-030	Diverter Valve
3	BH-7340-52	601-710-001	Double Hyd Line Clip
4	F-HC-0312-18-1000	600-640-001	5/16"-18 x 1" Bolt
5	F-LN-0312-18	600-690-001	5/16"-18 Lock Nut
6	BH-7000-06	601-420-017	90° Elbow 90 "O" to #6 JIC
7	F-HC-0250-20-1500	600-640-019	1/4"-20 x 1-1/2" Bolt
8	BH-7340-52	601-710-001	Double Hyd Line Clip
9	F-FW-0312-FW	600-710-006	5/16 x 1-1/2" Flatwasher
10	F-LN-0250-20	600-690-005	1/4"-20 Lock Nut
11	F-HC-0312-18-3500	600-640-020	5/16"-18 x 3-1/2" Bolt
12	BH-7340-53	006-000-021	Cylinder Yoke Assembly
13	BH-7340-57	007-007-121	Cylinder U-Bolt
14	BH-7340-58	007-010-004	Carriage Assembly
15	**BH-7606-21**	**600-860-012**	**Carriage Roller Assembly**
16	F-HN-0250-20	600-680-006	1/4"-20 Hex Nut
17	F-FW-0250	600-710-004	1/4" Flatwasher
18	BH-7340-59	007-007-001	Power Unit Side Cyl Assy
19	BH-7340-15BK	025-002-126	Height Extension Bracket
20	Nesting Style Height Extensions - See "Arm Parts" Below for Options		

Many of the power unit column parts are used on the blank or offside column shown below.

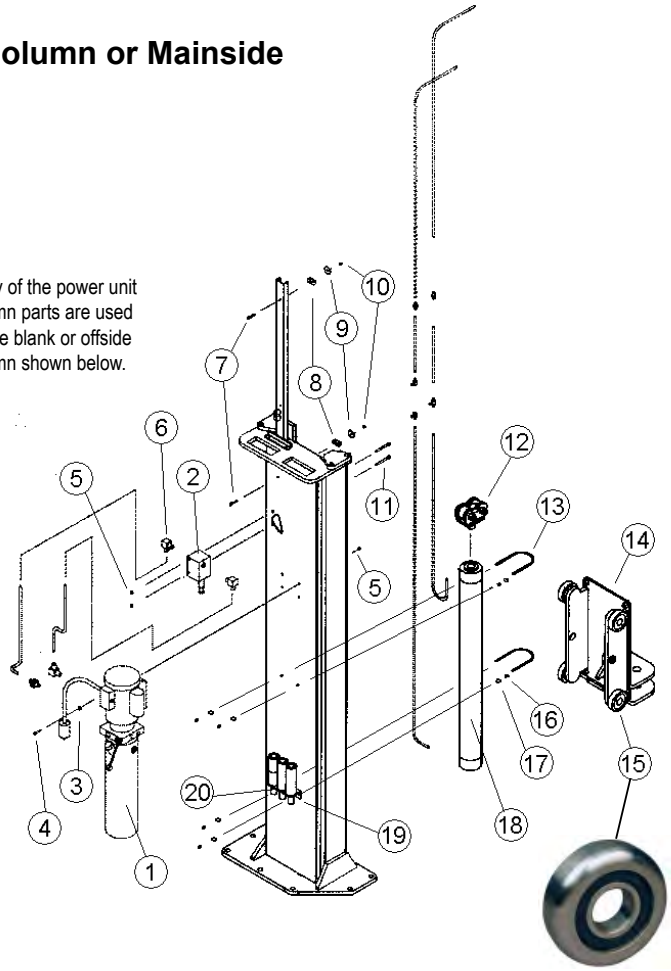

BH-7606-21

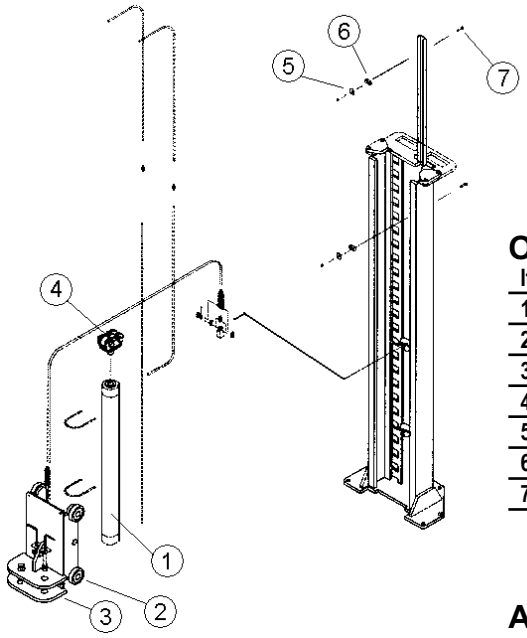

Opposite Side Column or Offside

Item	SVI P/N	Ref OE#	Description
1	BH-7340-60	007-007-002	Opposite Side Cylinder Assembly
2	**BH-7606-21**	**600-860-012**	**Carriage Roller Assembly**
3	BH-7340-58	007-010-004	Carriage Assembly
4	BH-7340-53	006-000-021	Cylinder Yoke Assembly
5	F-FW-0312-FW	600-710-006	5/16 x 1-1/2" Flatwasher
6	BH-7340-52	601-710-001	Double Hyd Line Clip
7	F-HC-0250-20-1500	600-640-019	1/4"-20 x 1-1/2" Bolt

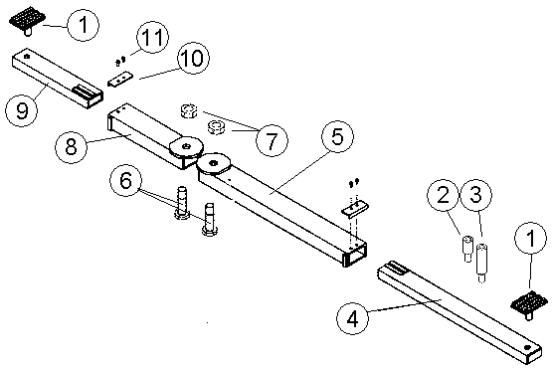

Arm Parts

Item	SVI P/N	Ref OE#	Description
1	BH-7341-58*	007-007-035	Steel Adapter Pad std.
1	BH-7341-60*	007-007-036	Steel Adapter Pad 1" taller
2	BH-7340-12	025-002-127	3" Nesting Height Extension
--	BH-7340-13		4" Nesting Height Extension
--	BH-7340-14		5" Nesting Height Extension
3	BH-7340-15	025-002-128	6" Nesting Height Extension
4	BH-7340-96	007-007-017	Long Inner Arm
5	BH-7340-97	007-007-015	Long Outer Swing Arm
6	BH-7340-98	007-010-103	Arm Pin
7	BH-7340-99	690-690-015	Arm Pin Nut
8	BH-7341-01	007-007-076	Short Outer Swing Arm
9	BH-7341-02	007-007-077	Short Inner Arm
10	BH-7341-03	007-007-130	Inner Arm Stop Plate
11	F-HC-0625-24-0625	600-600-004	5/16"-24 x 5/8" Bolt



BH-7340-13

* See SVI Price List or consult SVI DSR for more adapter selections

All names, numbers, symbols and descriptions are used for reference purposes only. It is not implied that any part listed is the product of these manufacturers. SVI does not represent and is not associated in any way with any other companies.

Entire contents copyright © 2021 SVI International, Inc.

Parts for Model A-7

Carriage Parts *(pictured right)*

Item	SVI P/N	Ref OE#	Description
1	**BH-7606-21**	**600-860-012**	**Carriage Roller Assembly**
2	F-RRE-1375	600-870-001	1-3/8” Snap Ring
3	BH-7341-04	007-010-005	Carriage Structure
4	BH-7341-05	009-010-124	Plunger
5	BH-7341-06	600-840-019	Spring
6	BH-7341-07	009-010-126	Housing
7	F-HC-0375-16-0500	600-630-001	3/8”-16 x 1/2 Screw
8	BH-7341-08	601-460-001	Protective Vinyl Cap
9	F-HC-0437-14-2500	600-640-006	7/16”-14 x 2-1/2” Bolt
10	BH-7606-20	600-860-002	Cam Roller 1-1/2”
11	F-FW-0437-SAE	600-710-005	7/16” Flatwasher
12	F-NL-0437-16	600-690-006	7/16-14 Lock Nut
13	BH-7029-01	600-830-026	Master Link
14	BH-7341-09	007-007-167	Chain Guide
15	F-NL-0312-18	600-690-001	5/16”-18 Lock Nut
16	BH-7341-10	007-007-401	Trim
17	BH-7029	600-830-003	Leaf Chain order 67 Pitches
18	BH-7029-01L	600-830-027	BH-7029 Chain Link
19	F-HC-0312-18-2500	600-640-050	5/16-18 x 2-1/2” Bolt
20	BH-7029	009-010-437	Leaf Chain order 3 Pitches
21	F-CP-093-1500	600-890-001	3/32” x 1-1/2” Cotter Pin
22	BH-7341-11	009-010-125	Cap
23	BH-7341-12	007-007-178	Washer
24	BH-7341-13	007-007-046	Lock Release Cable
25	F-FW-1375-SAE	600-710-014	1-3/8” Flatwasher
26	BH-7341-14	007-010-013	Carriage Lock Assembly

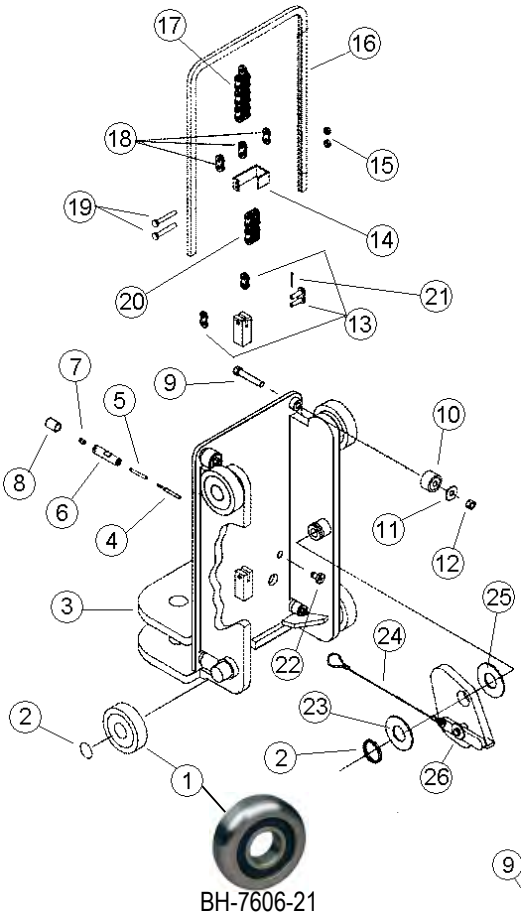

BH-7606-21

Item	SVI P/N	Ref OE#	Description
*	**BH-7340-20-1**		**Arm Restraint Kit (items 1–8)**
1	BH-7340-20D	007-007-141	Arm Restraint Handle
2	BH-7341-18	007-007-140	Handle Bracket
3	F-HC-0312-18-1500	600-640-002	5/16”-18 x 1-1/2” Bolt
4	F-FW-0312-SAE	600-710-003	5/16” Flatwasher
5	F-HN-0312-18	600-680-003	5/16” Hex Nut
6	BH-7341-19	600-840-007	Arm Restraint Spring
7	BH-7341-20	007-007-119	Arm Restraint Bar 8-3/8” Long
8	F-NL-0312-18	600-690-001	Nylock Hex Nut 5/16-18
9	BH-7029	600-830-003	Leaf Chain—Order 67 Pitches
10	F-CP-093-1500	600-890-001	3/32” x 1-1/2” Cotter Pin
11	BH-7029-01	600-830-026	Master Link
12	BH-7340-53	006-000-021	Cylinder Yoke Assembly
13	BH-7340-59	007-007-001	Power Unit Side Cyl Assy
14	BH-7340-60	007-007-002	Opposite Side Cylinder Assembly
15	**BH-7606-21**	**600-860-012**	**Carriage Roller Assembly**



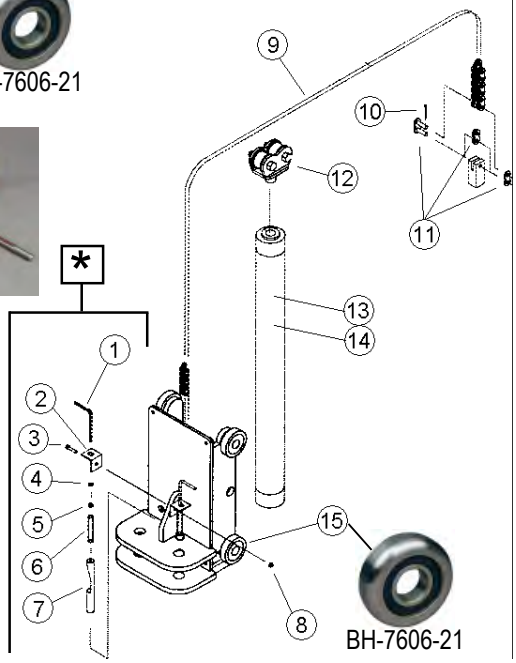

BH-7606-21

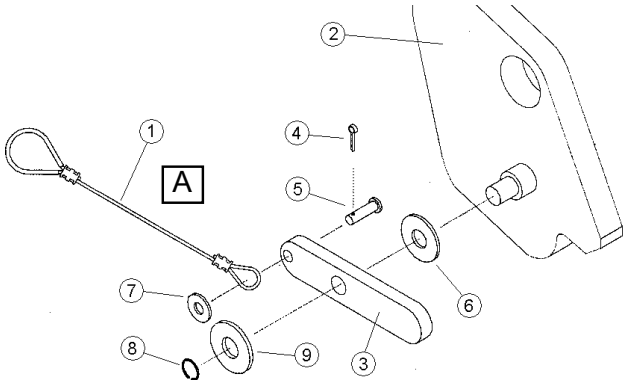

Carriage Lock Parts *(pictured left)*

Item	SVI P/N	Ref OE#	Description
A	BH-7341-14	007-010-013	Complete Lock Assembly
1	BH-7341-13	007-007-046	Lock Release Cable
2	BH-7341-15	009-010-067	Lock Latch
3	**BH-7340-08**	007-007-147	Lock Release Flipper
4	F-CP-093-0500	600-890-002	3/32” x 1/2” Cotter Pin
5	F-CV-250-0875	600-880-001	7/8” x 1/4” Clevis Pin
6	F-FW-0500-USS	600-710-008	1/2” Flatwasher
7	F-FW-0250-USS	600-710-004	1/4” Flatwasher
8	F-RRE-0500	600-870-003	1/2” Snap Ring
9	F-FW-0437-USS	600-710-005	7/16” Flatwasher

All names, numbers, symbols and descriptions are used for reference purposes only. It is not implied that any part listed is the product of these manufacturers. SVI does not represent and is not associated in any way with any other companies.

Entire contents copyright © 2021 SVI International, Inc.

Parts for Model A-7

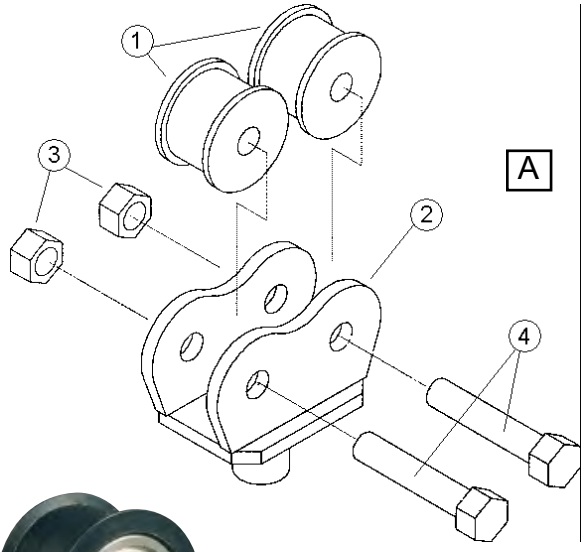



Chain Roller
BH-7230-30
(ref 600-860-005)

This **Rebar Cutter** is an essential tool to have on hand when installing or relocating any Mohawk lift or any other lift for that matter. The next time you hit rebar switch to this bit and a rotary drill and make cutting through pesky rebar a snap. Call to order yours today. Available in several sizes.



Chain Roller Parts

Item	SVI P/N	Ref OE#	Description
A	BH-7340-53	006-000-021	Cylinder Yoke/Roller Assembly
1	BH-7230-30	600-860-005	2-3/4" Chain Roller 3/4" Bore
2	BH-7340-55	006-000-012	Chain Roller Housing
3	F-NL-0750-16	600-690-003	3/4"-16 Lock Nut
4	BH-7340-56	006-000-139	Chain Roller Axle

Protect vehicle and hydraulic line damage as a result of over raising the vehicle on the lift. Call about bolt-on overhead limit shut-off solutions.

Hydraulic Routing

Item	SVI P/N	Ref OE#	Description
1	BH-7340-51	601-410-030	Flow Diverter Valve
2	BH-7340-66	601-410-031	4 GPM Velocity Fuse
3	BH-7000-06	601-420-017	90° Elbow 90 "O" to #6 JIC
4	BH-7341-21	601-420-011	Straight Union #6 JIC
5	BH-7341-22	601-300-045	Power Unit
6	BH-7002-39	601-310-005	Breather Cap (monarch)
7	BH-7341-23	007-007-051	74" Steel Tube Assembly
8	BH-7210-30	601-420-019	Fitting O-Ring to #6 JIC
9	BH-7341-24	007-007-083	24-3/4" Steel Tube Assembly
10	BH-7341-25	007-007-084	20-3/4" Steel Tube Assembly
11	BH-7341-26	000-001-019	9-1/2" Steel Tube Assembly
12	BH-7341-27	007-007-020	64" Steel Tube Assembly
13	BH-7341-28	000-001-018	12" Steel Tube Assembly
14	BH-7341-34	601-420-046	Tee O-Ring to #6 JIC to #6 JIC
15	BH-7341-29	007-007-050	43" Steel Tube Assembly
16	BH-7340-59	007-007-001	Power Unit Side Cyl Assy
17	BH-7340-60	007-007-002	Opposite Side Cylinder Assembly
18	BH-7340-84	601-420-061	45° Elbow O-Ring to #6 JIC
19	BH-7341-30	000-001-015	86" Steel Tube Assembly
20	BH-7341-31	007-007-031	45-1/4" Steel Tube Assembly
21	BH-7341-32	000-001-013	85-7/8" Steel Tube Assembly
22	BH-7341-33	000-001-014	84-3/8" Steel Tube Assembly
23	F-HC-0250-20-1500	600-640-019	1/4"-20 x 1-1/2" Bolt
24	BH-7340-52	601-710-001	Double Hyd Line Clip
25	F-FW-0312-FW	600-710-006	5/16" Fender Washer
26	F-LN-0250-20	600-690-005	1/4"-20 Lock Nut

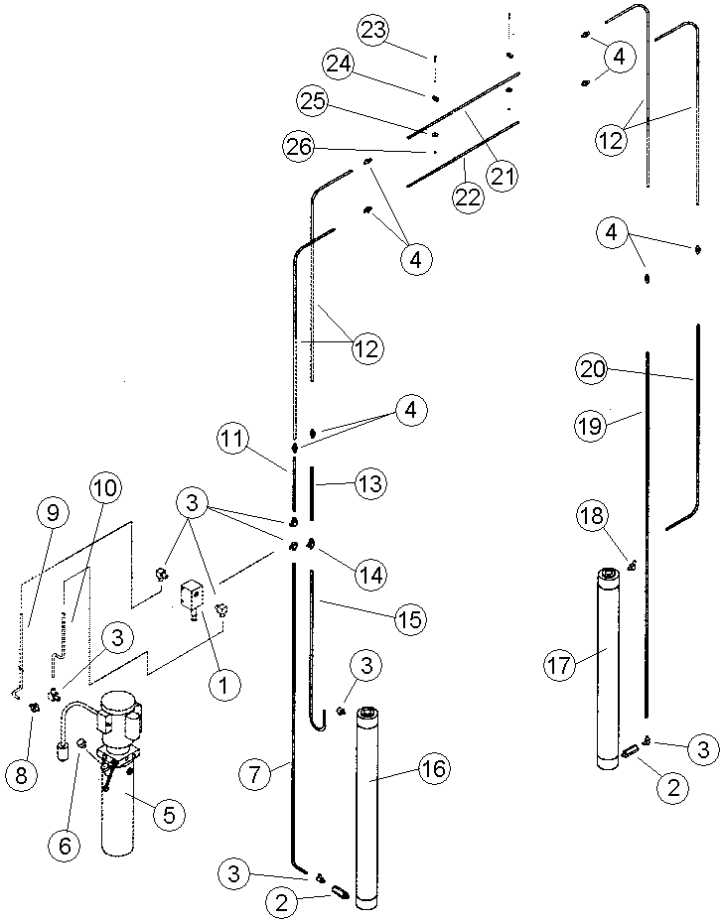

All names, numbers, symbols and descriptions are used for reference purposes only. It is not implied that any part listed is the product of these manufacturers. SVI does not represent and is not associated in any way with any other companies.

Entire contents copyright © 2021 SVI International, Inc.

Parts for Model A-7

Power Unit
Column Cylinder

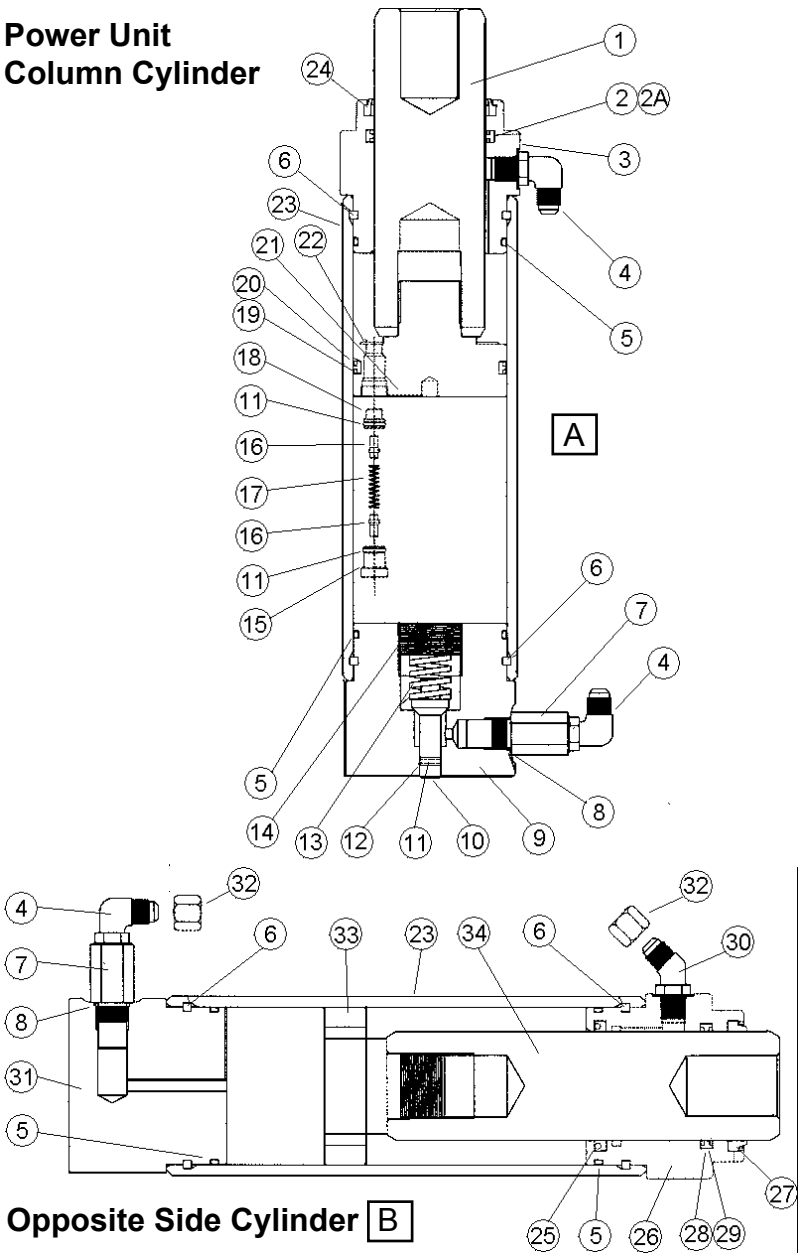

Opposite Side Cylinder B

Item	SVI P/N	Ref OE#	Description
A	BH-7340-59	007-007-001	Power Unit Column Cyl. Assy
B	BH-7340-60	007-007-002	Opposite Side Cylinder Assy
1	BH-7340-61	009-001-105	Cylinder Rod
2	BH-7340-62	601-000-003	T-Seal for Rod
2A	with item 2	601-060-007	T-Seal Back Up
3	BH-7340-64	015-000-109	Cylinder Rod Gland
4	BH-7006-06	601-420-017	90° Elbow
5	OB-90-237	601-030-003	O-Ring
6	BH-7340-65	025-002-132	Gland Retaining Ring/Key
7	BH-7340-66	601-410-031	Velocity Fuse
8	OB-70-908	601-030-008	O-Ring
9	BH-7340-67	007-007-110	Cylinder Bottom Gland
10	BH-7340-68	009-010-113	Inlet Spool
11	OB-70-012	601-030-002	O-Ring
12	AU-012	601-060-003	Back-Up Ring
13	BH-7340-69	600-840-002	Spring
14	BH-7340-70	007-007-145	Set Screw
15	BH-7340-71	009-001-153-2	Retainer
16	BH-7340-72	009-001-152-1	Spool
17	BH-7340-73	600-840-008-2	Spring
18	BH-7340-74	009-001-151	Insert
19	with item 20	601-060-013	Back-Up Ring
20	BH-7340-75	601-010-005	Piston T-Seal
21	BH-7340-76	009-001-108	Piston
22	BH-7340-77	007-007-143	Washer
23	BH-7340-78	009-001-104	Barrel
24	BH-7340-79	601-020-003	Rod Wiper
25	BH-7340-80	601-040-001	Polypack
26	BH-7340-81	015-000-110	Cylinder Rod Gland
27	BH-7340-82	601-020-002	Rod Wiper
28	with item 29	601-060-006	Back-Up Ring
29	BH-7340-83	601-000-002	T-Seal for Rod
30	BH-7340-84	601-420-061	45° Elbow
31	BH-7340-85	007-007-108	Cylinder Bottom Gland
32	BH-7340-86	601-420-001	Cap
33	BH-7340-87	007-007-101	Cylinder Piston
34	BH-7340-88	007-007-128	Cylinder Rod



BH-7340-92
(Ref 007-007-098)

Power Unit Column Cylinder Kits

SVI P/N	Ref OE#	Description
BH-7340-89	007-007-007	Bottom Gland Assembly (includes items: 4, 7, 8, 9, 10, 11, 12, 13, 14, and 15)
BH-7340-90	009-001-006	Cylinder Piston Assembly (includes items: 15, 11, 16, 17, 16, 11, 18, 19, 20, and 21)
BH-7340-91	009-001-002	Cylinder Rod Gland Housing Assembly (5, 4, 3, 2, 2A, and 24)
BH-7340-92	007-007-098	Seal Kit

Opposite Side Cylinder Kits

SVI P/N	Ref OE#	Description
BH-7340-94	007-007-009	Bottom Gland Assembly (includes items: 5, 31, 8, 7, and 4)
BH-7340-95	007-007-008	Cylinder Rod Gland Housing Assembly (5, 25, 26, 28, 29, 27 and 30)
BH-7340-93	007-007-097	Seal Kit

All names, numbers, symbols and descriptions are used for reference purposes only. It is not implied that any part listed is the product of these manufacturers. SVI does not represent and is not associated in any way with any other companies.

Entire contents copyright © 2021 SVI International, Inc.

Parts for System 1A

Power Unit Column or Mainside

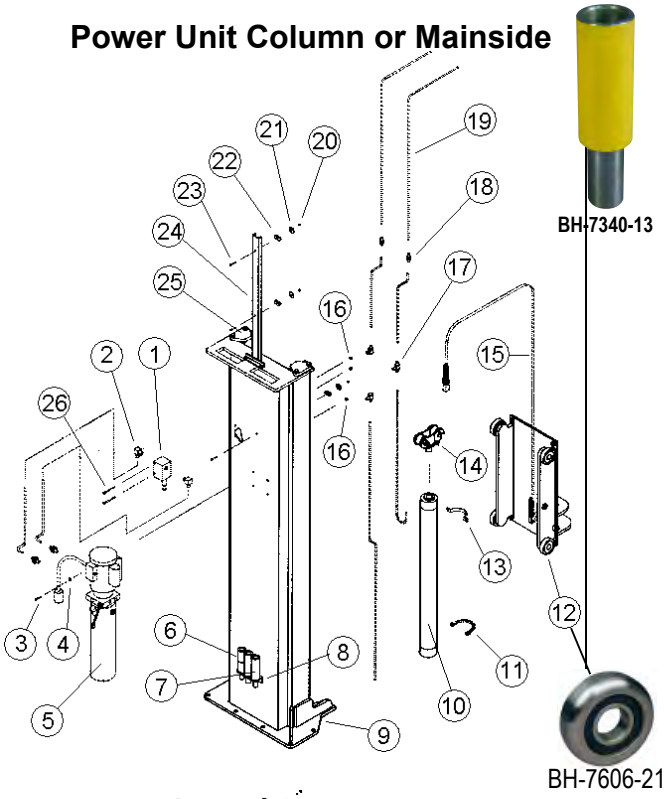

Item	SVI P/N	Ref OE#	Description
1	BH-7340-10	601-410-030	Diverter Valve
2	BH-7341-21	601-420-011	Straight Fitting #6 JIC to #6 JIC
3	F-HC-0312-18-0750	600-640-012	5/16"-18 x 3/4" Bolt
4	F-FW-0312-USS	600-710-003	5/16" Flatwasher
5	BH-7341-22	601-300-045	Power Unit
6	BH-7340-12	025-002-127	3" Nesting Height Extension
--	BH-7340-13		4" Nesting Height Extension
--	BH-7340-14		5" Nesting Height Extension
7	BH-7340-15	025-002-128	6" Nesting Height Extension
8	BH-7340-15BK	025-002-126	Height Extension Bracket
9	BH-7341-36	009-010-005	Power Unit Column Assy
10	BH-7340-59	007-007-001	Hydraulic Cylinder
11	BH-7341-38	009-001-122	Cylinder Clamp - Bottom
12	**BH-7606-21**	**600-860-012**	**Carriage Roller Assembly**
13	BH-7341-39	009-010-107	Cylinder Clamp - Top
14	BH-7341-40	009-010-040	Chain Roller/Yoke Assembly
15	BH-7029	600-830-001	Leaf Chain order 77 pitches
16	F-LN-0312-18	600-690-001	5/16"-18 Lock Nut
17	BH-7341-34	601-420-046	Tee O-Ring to #6 JIC to #6 JIC
18	BH-7341-21	601-420-011	Straight Fitting #6 JIC to #6 JIC
19	BH-7341-42	009-010-018	59-1/4" Steel Tube Assembly
20	F-LN-0250-20	600-690-005	1/4"-20 Lock Nut
21	F-FW-0312-FW	600-710-006	5/16" Fender Washer
22	BH-7340-52	601-710-001	Double Hyd Line Clip
23	F-HC-0250-20-1500	600-640-019	1/4"-20 x 1-1/2" Bolt
24	BH-7341-43	007-007-033	Hydraulic Line Support
25	BH-7341-44	009-001-141	Stop Plate
26	F-HC-0312-18-3500	600-640-020	5/16"-18 x 3-1/2" Bolt

Opposite Side Column

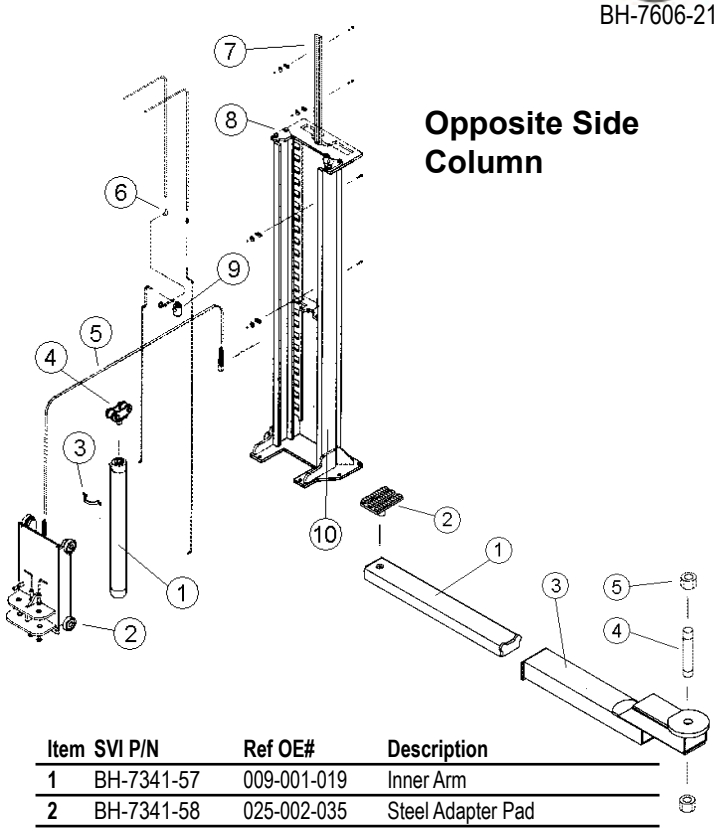

Item	SVI P/N	Ref OE#	Description
1	BH-7341-45	601-490-001	Opposite Side Cylinder
2	**BH-7606-21**	**600-860-012**	**Carriage Roller Assembly**
3	BH-7341-39	009-010-107	Cylinder Clamp - Top
4	BH-7341-40	009-010-040	Chain Roller/Yoke Assembly
5	BH-7029	600-830-001	Leaf Chain order 77 pitches
6	BH-7600-07	601-420-052	90° Elbow #6 JIC to #6 JIC
7	BH-7341-43	007-007-033	Line Support
8	BH-7341-44	009-001-141	Stop
9	BH-7341-53	009-010-009	Bleeder Valve Assembly
10	BH-7341-37	009-010-006	Opposite Side Column Assy
---	BH-7341-94	600-490-001	Seal Kit
---	BH-7341-93	009-001-097	Seal Kit

Help your customers stop on the right spot!

SVI extra wide wheel spotters are exactly what every lift user needs. Whether the lift is an in-ground or surface mount these spotters are essential. The extra wide profile is ideal for various wheelbase widths. Help them hit the right spot. Order today!

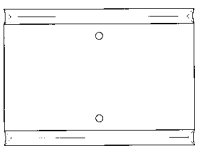

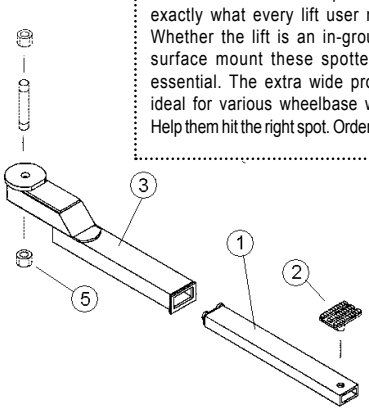

Item	SVI P/N	Ref OE#	Description
1	BH-7341-57	009-001-019	Inner Arm
2	BH-7341-58	025-002-035	Steel Adapter Pad
	See SVI Price List or call SVI for more adapter selections		
3	BH-7341-69	009-010-012	Outer Arm
4	BH-7341-70	009-010-114	1-3/8" Arm Pin
5	F-NL-1375-12	600-690-008	1-3/8"-12 Nylock Nut

All names, numbers, symbols and descriptions are used for reference purposes only. It is not implied that any part listed is the product of these manufacturers. SVI does not represent and is not associated in any way with any other companies.

Entire contents copyright © 2021 SVI International, Inc.

Parts for System 1A

Carriage Parts *(pictured right)*

Item	SVI P/N	Ref OE#	Description
1	**BH-7606-21**	**600-860-012**	**Carriage Roller Assembly**
2	F-RRE-1375	600-870-001	1-3/8" Snap Ring
3	BH-7341-71	009-010-069	Carriage Structure
4	BH-7341-06	600-840-019	Spring
5	BH-7341-05	009-010-124	Plunger
6	BH-7341-72	009-010-128	Plunger Housing
7	F-SS-0375-16-0500	600-630-001	3/8"-16 x 1/2 Screw
8	F-HC-0312-18-2500	600-640-050	5/16-18 x 2-1/2" Bolt
9	BH-7341-73	009-010-127	Chain Guide
10	BH-7029-01L	600-830-027	BH-7029 Chain Link
11	BH-7341-74	009-001-418	Trim
12	F-LN-0312-18	600-690-001	5/16"-18 Lock Nut
13	BH-7029	009-010-437	Leaf Chain order 3 Pitches
14	BH-7029-01	600-830-026	Master Link
15	F-HC-0437-14-2500	600-640-006	7/16"-14 x 2-1/2" Bolt
16	BH-7606-20	600-860-002	Cam Roller 1-1/2"
17	F-FW-0437-USS	600-710-005	7/16" Flatwasher
18	F-NL-0437-14	600-690-006	7/16-14 Lock Nut
19	F-FW-1375-SAE	600-710-014	1-3/8" Flatwasher
20	BH-7341-75	009-010-068	Carriage Lock Assembly
21	BH-7341-76	007-007-178	Washer
22	BH-7341-35	600-870-001	1-3/8" Snap Ring
23	**BH-7340-04**	**009-001-066**	**Lock Release Cable**
24	BH-7341-11	009-010-125	Cap
25	BH-7029	600-830-001	Leaf Chain order 77 Pitches

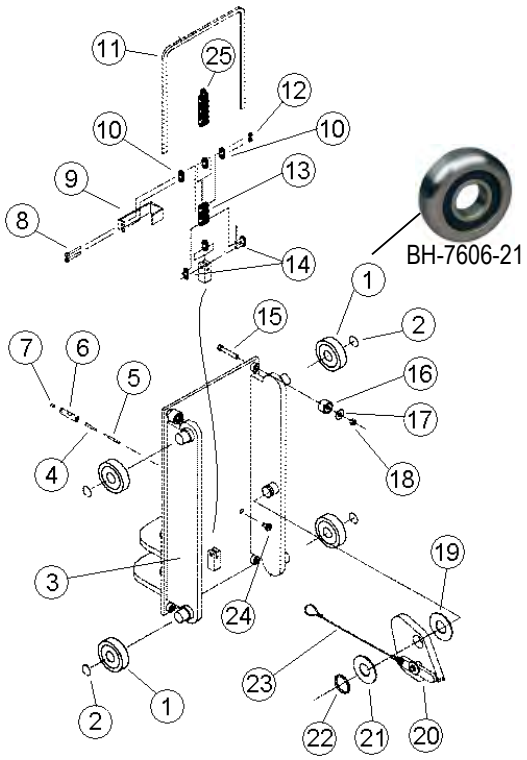

Arm Restraint Parts

Item	SVI P/N	Ref OE#	Description
*	BH-7340-20-2		Arm Restraint Kit (items 1 - 7)
1	BH-7341-77	600-870-002	Retaining Ring
2	F-FW-1000	600-710-010	1" Flatwasher
3	**BH-7340-20A**	**600-840-006**	**Spring**
4	BH-7340-20B	009-001-156	Arm Restraint Bar 12-1/4" Long
5	F-FW-0312-FW	600-710-006	5/16" Fender Washer
6	F-HN-0312-18	600-680-003	5/16"-18 Hex Nut
7	BH-7340-20D	007-007-141	Arm Restraint Handle
8	BH-7340-59	007-007-001	Power Unit Column Cylinder
9	BH-7341-45	601-490-001	Opposite Side Cylinder
10	BH-7029-01	600-830-026	Master Link
11	F-CP-093-1500	600-890-001	3/32" x 1-1/2" Cotter Pin
12	BH-7341-40	009-010-040	Chain Roller/Yoke Assembly
13	BH-7029	600-830-001	Leaf Chain order 77 Pitches
14	**BH-7606-21**	**600-860-012**	**Carriage Roller Assembly**

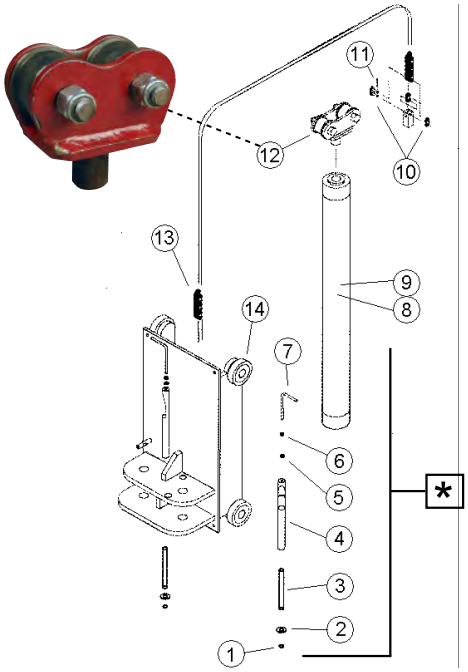

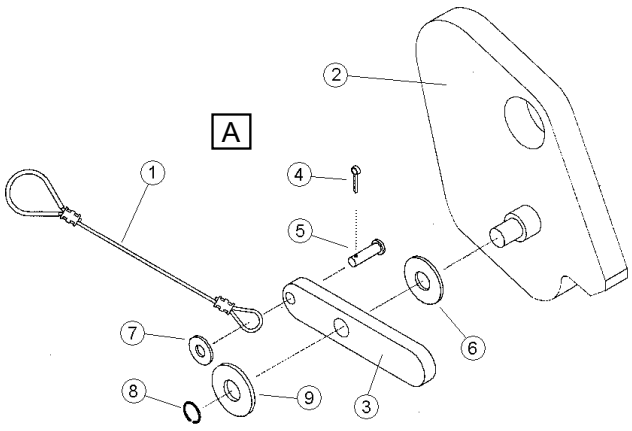

Carriage Lock Parts *(pictured left)*

Item	SVI P/N	Ref OE#	Description
A	BH-7341-75	009-010-068	Complete Lock Assembly
1	**BH-7340-04**	**009-001-066**	**Lock Release Cable**
2	BH-7341-15	009-010-067	Lock Latch
3	**BH-7340-08**	007-007-147	Lock Release Flipper
4	F-CP-093-0500	600-890-002	3/32" x 1/2" Cotter Pin
5	BH-7340-05	600-880-001	7/8" x 1/4" Clevis Pin
6	F-FW-0437-USS	600-710-005	7/16" Flatwasher
7	F-FW-0250-USS	600-710-004	1/4" Flatwasher
8	F-RRE-0500	600-870-003	1/2" Snap Ring
9	F-FW-0500-USS	600-710-008	1/2" Flatwasher

All names, numbers, symbols and descriptions are used for reference purposes only. It is not implied that any part listed is the product of these manufacturers. SVI does not represent and is not associated in any way with any other companies.

Entire contents copyright © 2021 SVI International, Inc.

Parts for System 1A

Chain Roller Parts

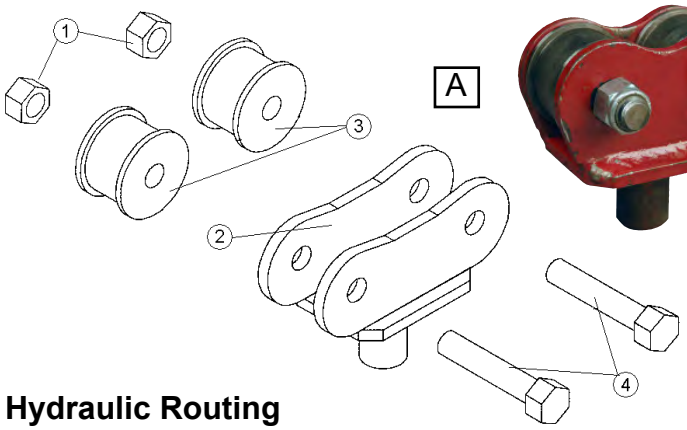

BH-7341-40

Item	SVI P/N	Ref OE#	Description
A	BH-7341-40	009-010-040	Chain Roller/Yoke Assembly
1	F-NL-0750-16	600-690-003	3/4"-16 Lock Nut
2	BH-7341-41	009-001-061	Chain Roller Housing
3	BH-7230-30	600-860-005	2-3/4" Chain Roller 3/4" Bore
4	BH-7340-56	006-000-139	Chain Roller Axle



Chain Roller
BH-7230-30
(ref 600-860-005)

Protect vehicle and hydraulic line damage as a result of over raising the vehicle on the lift. Call about bolt-on overhead limit shut-off solutions.

Hydraulic Routing

Item	SVI P/N	Ref OE#	Description
1	BH-7340-59	007-007-001	Power Unit Side Cylinder
2	BH-7340-66	601-410-031	Velocity Fuse (4 GPM)
3	BH-7341-22	601-300-045	Power Unit
4	BH-7006-06	601-420-017	90° Elbow #6 "O" to # 6 JIC
5	BH-7341-80	009-010-026	78" Steel Tube Assembly
6	BH-7006-06	601-420-017	90° Elbow #6 "O" to #6 JIC
7	BH-7341-81	009-010-027	43" Steel Tube Assembly
8	BH-7341-34	601-420-046	Tee "O" to #6 JIC to #6 JIC
9	BH-7341-82	009-010-029	25-1/4" Steel Tube Assembly
10	BH-7341-83	009-010-028	23-1/4" Steel Tube Assembly
11	BH-7341-21	601-420-011	Straight Fitting #6 JIC to #6 JIC
12	BH-7341-42	009-010-018	59-1/4" Steel Tube Assembly
13	BH-7002-39	601-310-005	Breather Cap
14	BH-7210-30	601-420-019	Straight Fitting #6 "O" to #6 JIC
15	BH-7341-84	015-000-025	28-15/16" Steel Tube Assembly
16	BH-7341-85	015-000-024	23-3/4" Steel Tube Assembly
17	BH-7340-10	601-410-030	Diverter Valve
18	BH-7341-86	000-001-001	100" Steel Tube Assembly
19	F-HN-0250-20	600-890-005	1/4"-20 Hex Nut
20	F-FW-0250-SAE	600-710-004	1/4" Flatwasher
21	BH-7340-52	601-710-001	Double Hyd Line Clip
22	F-HN-0250-20-1500	600-640-019	1/4"-20 x 1-1/2" Bolt
23	BH-7600-07	601-420-052	90° Elbow #6 JIC to #6 JIC
24	BH-7341-87	009-010-059	13-3/4" Steel Tube Assembly
25	BH-7341-88	009-010-033	68-3/4" Steel Tube Assembly
26	BH-7341-90	601-420-025	Straight Fitting #4 "O" to #6 JIC
27	BH-7341-53	009-010-009	Bleeder Valve
28	BH-7341-47	601-410-026	Velocity Fuse (4 GPM)
29	BH-7341-89	009-010-032	102-1/2" Steel Tube Assembly
30	BH-7341-45	601-490-001	Opposite Side Cylinder

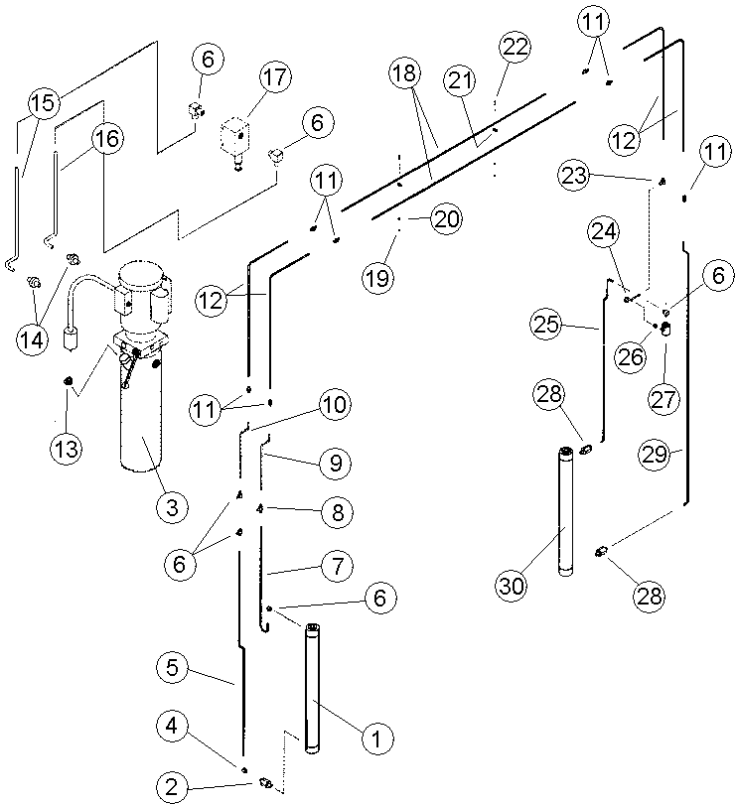

Bleeder Valve

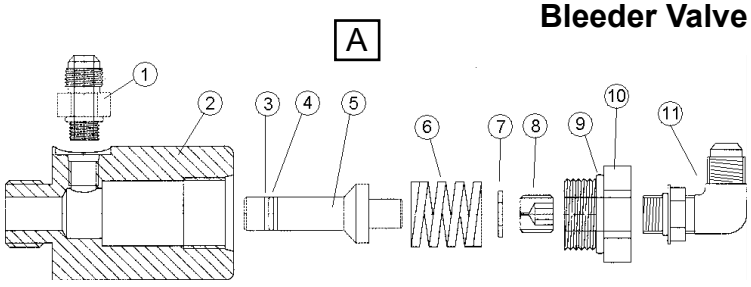

Item	SVI P/N	Ref OE#	Description
A	BH-7341-53	009-010-009	Bleeder Valve
1	BH-7006-06	601-420-017	90° Elbow #6 "O" to #6 JIC
2	BH-7341-54	009-010-101	Bleeder Valve Body
3	AU-012	601-060-003	Back-Up Ring
4	OB-70-012	601-030-002	O-Ring
5	BH-7340-68	009-010-113	Bleeder Valve Spool
6	BH-7340-69	600-840-002	Spring
7	F-FW-0312-SAE	600-710-003	5/16" Flatwasher
8	BH-7341-55	009-010-112	Set Screw
9	OB-90-912	601-030-017	O-Ring
10	BH-7341-56	009-010-111	Reducer #12 "O" to #6 "O"
11	BH-7006-06	601-420-017	90° Elbow #6 "O" to #6 JIC

All names, numbers, symbols and descriptions are used for reference purposes only. It is not implied that any part listed is the product of these manufacturers. SVI does not represent and is not associated in any way with any other companies.

Entire contents copyright © 2021 SVI International, Inc.

Parts for System 1A

Power Unit
Column Cylinder

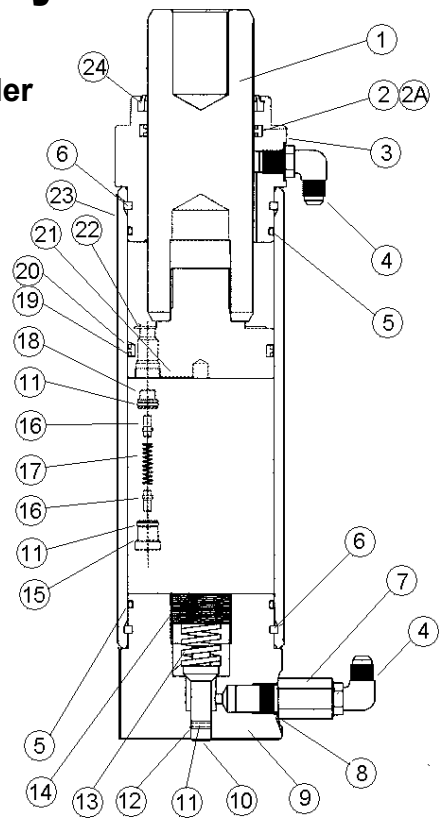

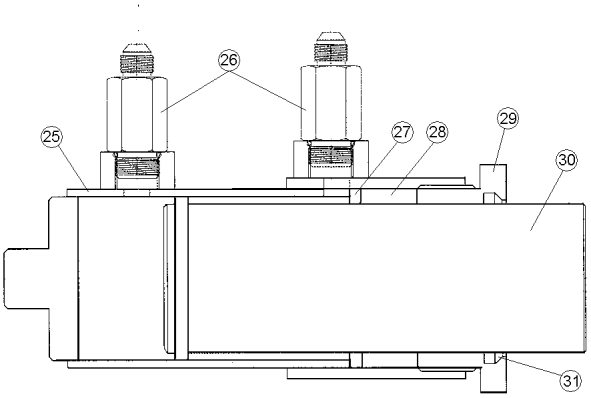

Opposite Side Cylinder B

Item	SVI P/N	Ref OE#	Description
A	BH-7340-59	007-007-001	Power Unit Column Cyl. Assy
B	BH-7341-45	601-490-001	Opposite Side Cylinder Assy
1	BH-7340-61	009-001-105	Cylinder Rod
2	BH-7340-62	601-000-003	T-Seal for Rod
2A	with item 2	601-060-007	T-Seal Back Up
3	BH-7340-64	015-000-109	Cylinder Rod Gland
4	BH-7006-06	601-420-017	90° Elbow
5	OB-90-237	601-030-003	O-Ring
6	BH-7340-65	025-002-132	Gland Retaining Ring/Key
7	BH-7340-66	601-410-031	Velocity Fuse
8	OB-70-908	601-030-008	O-Ring
9	BH-7340-67	007-007-110	Cylinder Bottom Gland
10	BH-7340-68	009-010-113	Inlet Spool
11	OB-70-012	601-030-002	O-Ring
12	AU-012	601-060-003	Back-Up Ring
13	BH-7340-69	600-840-002	Spring
14	BH-7340-70	007-007-145	Set Screw
15	BH-7340-71	009-001-153	Retainer
16	BH-7340-72	009-001-152-1	Spool
17	BH-7340-73	600-840-008-2	Spring
18	BH-7340-74	009-001-151	Insert
19	with item 20	601-060-013	Back-Up Ring
20	BH-7340-75	601-010-005	Piston T-Seal
21	BH-7340-76	009-001-108	Piston
22	BH-7340-77	007-007-143	Washer
23	BH-7340-78	009-001-104	Barrel
24	BH-7340-79	601-020-003	Rod Wiper
25	BH-7341-46	05464-44.50	Cylinder Barrel
26	BH-7341-47	601-410-026	Velocity Fuse
27	BH-7341-48	601-490-012	Seal Ring
28	BH-7341-49	601-490-011	Packing Vee Set
29	BH-7341-50	009-001-005	Gland
30	BH-7341-51	05469-44.50	Cylinder Rod
31	BH-7341-52	601-490-010	Rod Wiper



BH-7340-91
(Ref 009-001-002)



BH-7340-92
(Ref 007-007-098)

Power Unit Column Cylinder Kits

Item SVI P/N	Ref OE#	Description
BH-7340-89	007-007-007	Bottom Gland Assembly (includes items: 4, 7, 8, 9, 10, 11, 12, 13, 14, and 15)
BH-7340-90	009-001-006	Cylinder Piston Assembly (includes items: 15, 11, 16, 17, 16, 11, 18, 19, 20, and 21)
BH-7341-91	009-001-002	Cylinder Rod Gland Housing Assembly (5, 4, 3, 2, 2A, and 24)
BH-7340-92	007-007-098	Seal Kit

For parts for Mohawk Lifts - SVI is your answer!

All names, numbers, symbols and descriptions are used for reference purposes only. It is not implied that any part listed is the product of these manufacturers. SVI does not represent and is not associated in any way with any other companies.

Entire contents copyright © 2021 SVI International, Inc.

Parts for LMF-12 and TP-15

Power Unit Column or Mainside

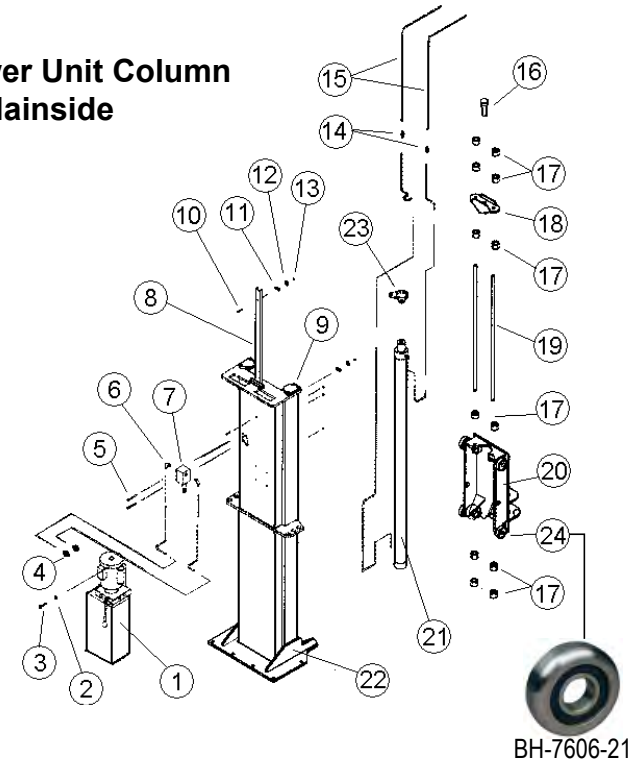

BH-7606-21

Item	SVI P/N	Ref OE#	Description
1	BH-7342-01	601-300-046	Power Unit LMF-12
1	BH-7342-02	601-300-047	Power Unit TP-15
2	F-FW-0312-USS	600-710-003	5/16" Flatwasher
3	F-HC-0312-15-1500	600-640-001	5/16"-18 x 1-1/2" Bolt
4	BH-7210-30	601-420-019	Straight Fitting #6 "O" to #6 JIC
5	F-HC-0312-18-3500	600-640-020	5/16"-18 x 3-1/2" Bolt
6	BH-7006-06	601-420-012	90° Elbow #6 "O" to #6 JIC
7	BH-7340-51	601-410-030	Diverter Valve LMF-12
8	BH-7341-43	007-007-033	Hydraulic Line Support
9	BH-7341-44	009-001-141	Stop
10	F-HC-0250-20-1500	600-640-019	1/4"-20 x 1-1/2" Bolt
11	BH-7340-52	601-710-001	Double Hyd Line Clip
12	F-FW-0312-FW	600-610-006	5/16" Fender Washer
13	F-LN-0250-20	600-690-005	1/4"-20 Lock Nut
14	BH-7341-21	601-420-011	Straight Fitting #6 JIC to #6 JIC
15	BH-7342-03	012-012-071	100" Steel Tube Assembly
16	F-HC-1000-14-2500	600-640-055	1"-14 x 2-1/2" Bolt
17	F-HN-1000-14	600-680-004	1"-14 Hex Nut
18	BH-7342-04	012-012-016	Cylinder Rod End
19	BH-7342-05	012-012-131	1" Dia. Lifting Bar
20	BH-7342-06	015-000-006	Carriage Assembly
21	BH-7342-07	015-000-009	Power Unit Side Cylinder
22	BH-7342-21	015-000-003	Power Unit Column
23	BH-7342-22	015-000-103	Cylinder Holder
24	**BH-7606-21**	**600-860-012**	**Carriage Roller**

Opposite Side Column

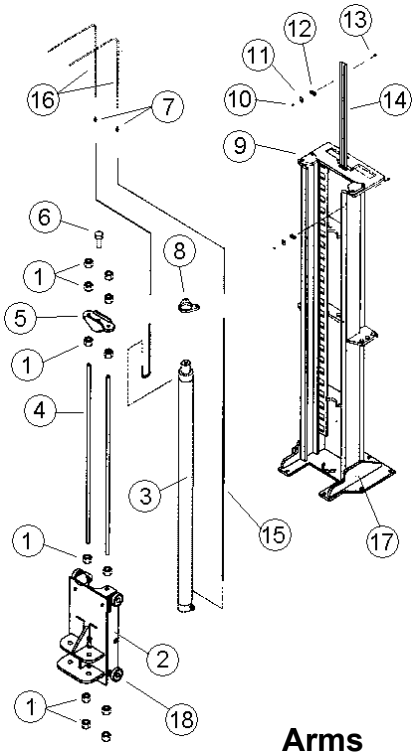

Item	SVI P/N	Ref OE#	Description
1	F-HN-1000-14	600-680-004	1"-14 Hex Nut
2	BH-7342-23	015-000-006	Carriage Assembly
3	BH-7342-08	015-000-010	Opposite Side Cylinder Assembly
4	BH-7342-05	012-012-131	1" Dia. Lifting Bar
5	BH-7342-05	012-012-009	Cylinder Rod End
6	F-HC-1000-14-2500	600-640-055	1"-14 x 2-1/2" Bolt
7	BH-7341-21	601-420-011	Straight Fitting #6 JIC to #6 JIC
8	BH-7342-22	015-000-103	Cylinder Holder
9	BH-7341-44	009-001-141	Stop
10	F-HC-0250-20-1500	600-640-019	1/4"-20 x 1-1/2" Bolt
11	BH-7340-52	601-710-001	Double Hyd Line Clip
12	F-FW-0312-FW	600-610-006	5/16" Fender Washer
13	F-LN-0250-20	600-690-005	1/4"-20 Lock Nut
14	BH-7341-44	007-007-033	Hydraulic Line Support
15	BH-7342-25	000-001-023	91" Steel Tube Assembly
16	BH-7342-03	012-012-071	100" Steel Tube Assembly
17	BH-7342-26	015-000-004	Opposite Side Column
18	**BH-7606-21**	**600-860-012**	**Carriage Roller**

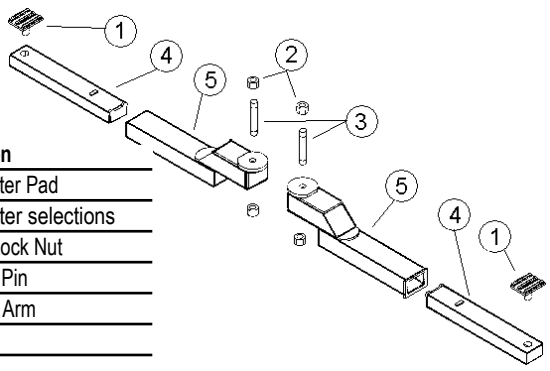

Arms

Item	SVI P/N	Ref OE#	Description
1	BH-7340-23	012-012-047	Steel Adapter Pad
	See SVI Price List or call SVI for more adapter selections		
2	F-LN-1375-12	600-690-008	1-3/8"-12 Lock Nut
3	BH-7340-06	012-012-113	1-3/8" Arm Pin
4	BH-7342-27	012-012-015	Inner Slide Arm
5	BH-7342-28	012-012-013	Outer Arm

All names, numbers, symbols and descriptions are used for reference purposes only. It is not implied that any part listed is the product of these manufacturers. SVI does not represent and is not associated in any way with any other companies.

Entire contents copyright © 2021 SVI International, Inc.

Parts for LMF-12 and TP-15

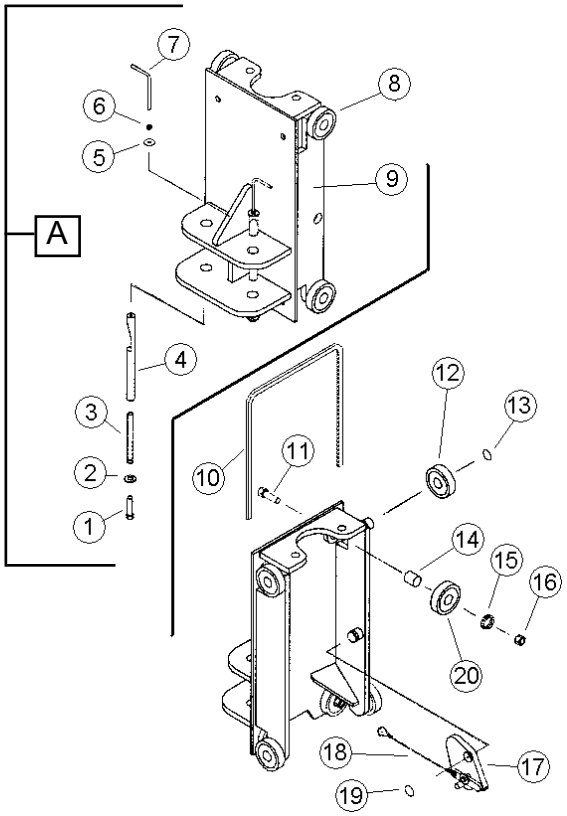

Item	SVI P/N	Ref OE#	Description
A	**BH-7340-20**		**Arm Restraint Kit (items 1-7)**
1	F-HC-0625-11-2500	600-640-010	5/8"-11 x 2-1/2" Bolt
2	F-FW-0625	600-710-007	5/8" Flatwasher
3	**BH-7340-20A**	**600-840-006**	**Arm Restraint Spring**
4	BH-7340-20B	009-001-156	Arm Restraint Bar 12-1/4" Long
5	F-FW-0312-FW	600-710-006	5/16" Fender Washer
6	F-HN-0312-18	600-680-003	5/16"-18 Hex Nut
7	BH-7340-20D	007-007-141	Arm Restraint Pull Handle
8	**BH-7342-31**	**600-860-007**	**4" Carriage Roller - Heavy Duty**
9	BH-7342-32	012-012-005	Carriage
10	BH-7342-33	012-012-408	Trim
11	F-HC-0750-16-3500	600-640-011	3/4"-16 x 3-1/2" Bolt
12	**BH-7342-31**	**600-860-007**	**4" Carriage Roller - Heavy Duty**
13	BH-7341-35	600-870-001	1-3/8" Retaining Ring
14	BH-7342-34	012-012-152	Bearing
15	F-FW-0750-SAE	600-710-001	3/4" Flatwasher
16	F-NL-0750-16	600-690-003	3/4"-16 Lock Nut
17	BH-7342-29	015-000-008	Carriage Lock Assembly
18	**BH-7340-04**	**009-001-066**	**Lock Release Cable**
19	BH-7341-35	600-870-001	1-3/8" Retaining Ring
20	BH-7340-25	600-860-012	4" Carriage Roller - Std Duty

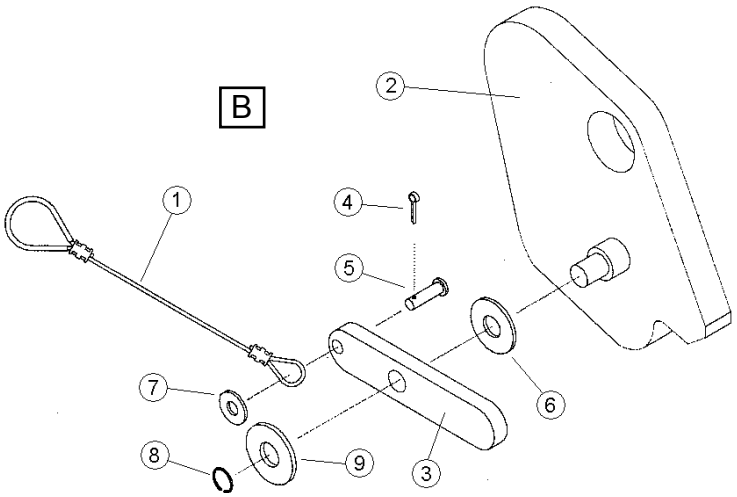

Item	SVI P/N	Ref OE#	Description
B	BH-7342-29	015-000-008	Complete Lock Assembly
1	**BH-7340-04**	**009-001-066**	**Lock Release Cable**
2	BH-7342-30	015-000-007	Lock Latch
3	**BH-7340-08**	007-007-147	Lock Release Flipper
4	F-CP-093-0500	600-890-002	3/32" x 1/2" Cotter Pin
5	F-CV-250-0875	600-880-001	7/8" x 1/4" Clevis Pin
6	F-FW-0437-USS	600-710-005	7/16" Flatwasher
7	F-FW-0250-USS	600-710-004	1/4" Flatwasher
8	BH-7341-16	600-870-003	1/2" Snap Ring
9	F-FW-0500-USS	600-710-008	1/2" Flatwasher

Height Extensions

Item	SVI P/N	Ref OE#	Description
1	BH-7340-17	018-000-106	5" Nesting Height Extension
2	BH-7340-18	012-012-151	7-1/2" Nesting Height Extension
3	BH-7340-19	018-000-105	10" Nesting Height Extension
4	BH-7340-16		7-1/2" to 9-1/2" Adjustable Ext.

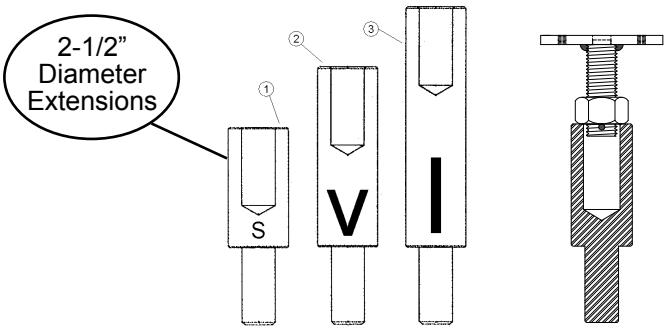

power station

A welcome addition to any Mohawk lift. Available in your choice of Red, Blue, Black or Yellow. Add a Power Station and make a Mohawk lift one of the most productive tools in the shop. Order today!



All names, numbers, symbols and descriptions are used for reference purposes only. It is not implied that any part listed is the product of these manufacturers. SVI does not represent and is not associated in any way with any other companies.

Entire contents copyright © 2021 SVI International, Inc.

Parts for LMF-12 and TP-15

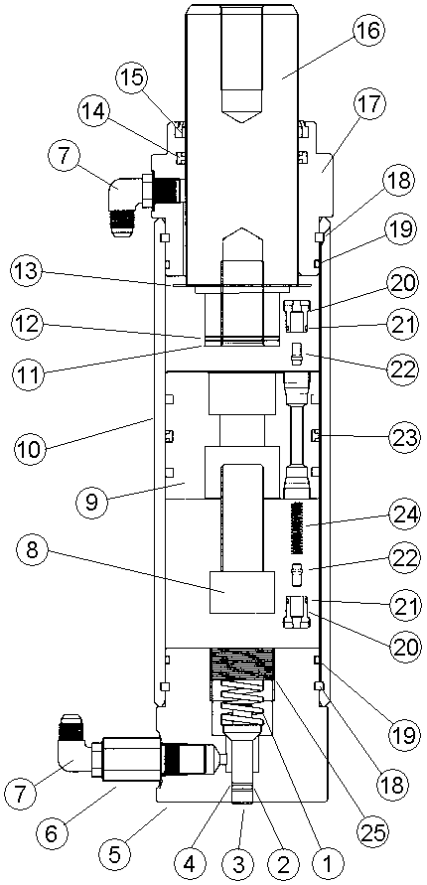

Power Unit Side

Opposite Side

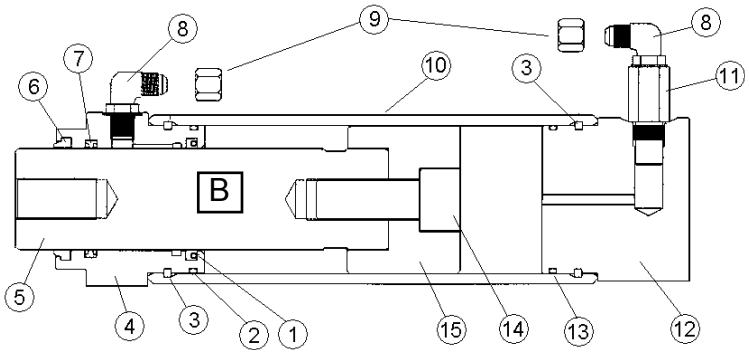

Hydraulic Cylinders

Item	SVI P/N	Ref OE#	Description
A	BH-7342-07	015-000-009	Power Unit Column Cylinder
1	BH-7340-69	600-840-002	Spring
2	OB-70-012	601-030-002	Inlet Spool O-Ring
3	BH-7340-68	009-010-113	Inlet Spool
4	AU-012	601-060-003	Inlet Spool Back-Up
5	BH-7340-67	007-007-110	End Cap/Gland
6	BH-7340-66	601-410-031	Velocity Fuse
7	BH-7006-06	601-420-017	90° Elbow
8	BH-7342-09	600-650-001	Socket Head Capscrew
9	BH-7342-10	012-012-102	Cylinder Piston
10	BH-7342-11	012-012-101	Cylinder Barrel
11	BH-7342-12	012-012-103	Cylinder Rod
12	OB-70-030	601-030-009	O-Ring
13	BH-7340-77	007-007-143	Washer
14	BH-7340-62	601-000-003	Rod T-Seal w/back-ups
15	BH-7340-79	601-020-003	Rod Wiper
16	BH-7342-12	012-012-103	Cylinder Rod
17	BH-7340-64	015-000-109	Gland
18	BH-7340-65	025-002-132	Gland Retainer
19	OB-90-237	601-030-003	O-Ring
20	BH-7340-71	009-001-153-2	Spool Retainer
21	OB-70-012	601-030-002	O-Ring
22	BH-7340-72	009-001-152-1	Spool
23	BH-7340-75	601-010-005	Piston T-Seal w/back-ups
24	BH-7342-13	600-840-009	Spring
25	BH-7340-70	007-007-145	Set Screw

Item	SVI P/N	Ref OE#	Description
B	BH-7342-08	015-000-010	Opposite Side Cylinder Assy.
1	BH-7340-80	601-040-001	Polypack Seal
2	OB-90-237	601-030-003	O-Ring
3	BH-7340-65	025-002-132	Gland Retainer
4	BH-7342-14	015-000-110	Gland
5	BH-7342-15	012-012-105	Cylinder Rod
6	BH-7340-82	601-020-002	Rod Wiper
7	BH-7340-83	601-000-002	Rod T-Seal w/back-ups
8	BH-7006-06	601-420-017	90° Elbow
9	BH-7340-86	601-420-001	Nut
10	BH-7342-11	012-012-101	Barrell
11	BH-7340-66	601-410-031	Velocity Fuse
12	BH-7342-16	007-007-108	Gland
13	OB-90-237	601-030-003	O-Ring
14	BH-7342-09	600-650-001	Socket Head Capscrew
15	BH-7342-17	012-012-104	Cylinder Piston



BH-7340-27
(OEM 012-012-098-1)
Seal Kit



BH-7340-28
(OEM 012-012-097-1)
Seal Kit

Power Unit Column Cylinder Kits

Item SVI P/N	Ref OE#	Description
BH-7340-89	007-007-007	Bottom Gland Assembly (includes items: 7, 6, 5, 4, 3, 2, 1, 25, and 19)
BH-7342-18	012-012-003	Cylinder Piston Assembly (includes items: 9, 20, 21, 22, 23, and 24,)
BH-7342-19	015-000-011	Cylinder Rod Gland Housing Assembly (7, 14, 15, 17, and 19)
BH-7340-50	012-012-198-1	Seal Kit
BH-7340-27	012-012-098-1	Seal Kit

Opposite Side Cylinder Kits

Item SVI P/N	Ref OE#	Description
BH-7340-94	007-007-009	Bottom Gland Assembly (includes items: 8. 11, 12, and 13)
BH-7340-90	009-001-006	Cylinder Rod Gland Assembly (includes items: 1, 2, 4, 6, and 7)
BH-7340-28	012-012-097-1	Seal Kit

All names, numbers, symbols and descriptions are used for reference purposes only. It is not implied that any part listed is the product of these manufacturers. SVI does not represent and is not associated in any way with any other companies.

Entire contents copyright © 2021 SVI International, Inc.



The #1 Source for Auto Lift Power Units!

BH-7006A Series - Single Phase
SPX Stone Power Unit

SPX STONE SPX Stone power units are a compact hydraulic power source utilizing an electric motor with the capability to generate high pressure ratings. The units are built specially for SVI and the industry it serves to provide a wide range of customer-specified pressure relief valve settings. The ability to properly select the required pressure relief allows industry professionals to confidently match the right power unit to the application. SVI performs this service routinely every day to ensure power units are shipped on a same-day basis with the correct pressure relief setting required for the job.

208-230 VAC, 2HP, 1PH, 3450 RPM Motor
4.0 Gallon Reservoir

- **Frame:** 56 FR
- **Max Amps:** 230 VAC 18
- **Pump:** 2.3 GPM@2200 PSI*
- **Maximum Run Time:** 75 Seconds
- **Pressure / Return Port Size:** 9/16" SAE
- **Auxiliary Return Port:** 3/8" NPT

Part #	SPX / Stone #	Pressure Relief Valve (psi/bar)	Motor	Pump	Easy Adaptation Kit
BH-7006A-13	AB-1488	1885 psi / 130 bar	208-230 VAC, 2HP, 1PH, 3450 RPM	2.5CC/Rev	Optional BH-7000-00
BH-7006A-14	AB-1488	2030 psi / 140 bar	208-230 VAC, 2HP, 1PH, 3450 RPM	2.5CC/Rev	Optional BH-7000-00
BH-7006A-15	AB-1488	2175 psi / 150 bar	208-230 VAC, 2HP, 1PH, 3450 RPM	2.5CC/Rev	Optional BH-7000-00
BH-7006A-16	AB-1488	2320 psi / 160 bar	208-230 VAC, 2HP, 1PH, 3450 RPM	2.5CC/Rev	Optional BH-7000-00
BH-7006A-17	AB-1488	2465 psi / 170 bar	208-230 VAC, 2HP, 1PH, 3450 RPM	2.5CC/Rev	Optional BH-7000-00
BH-7006A-18	AB-1488	2610 psi / 180 bar	208-230 VAC, 2HP, 1PH, 3450 RPM	2.5CC/Rev	Optional BH-7000-00
BH-7006A-19	AB-1488	2755 psi / 190 bar	208-230 VAC, 2HP, 1PH, 3450 RPM	2.5CC/Rev	Optional BH-7000-00
BH-7006A-20	AB-1488	2900 psi / 200 bar	208-230 VAC, 2HP, 1PH, 3450 RPM	2.5CC/Rev	Optional BH-7000-00
BH-7006A-21	AB-1488	3045 psi / 210 bar	208-230 VAC, 2HP, 1PH, 3450 RPM	2.5CC/Rev	Optional BH-7000-00
BH-7006-01-22	AB-1488	3190 psi / 220 bar	208-230 VAC, 2HP, 1PH, 3450 RPM	1.6CC/Rev	Optional BH-7000-00
BH-7006-01-23	AB-1488	3335 psi / 230 bar	208-230 VAC, 2HP, 1PH, 3450 RPM	1.6CC/Rev	Optional BH-7000-00
BH-7006-01-24	AB-1488	3480 psi / 240 bar	208-230 VAC, 2HP, 1PH, 3450 RPM	1.6CC/Rev	Optional BH-7000-00
BH-7006-01-25	AB-1488	3625 psi / 250 bar	208-230 VAC, 2HP, 1PH, 3450 RPM	1.6CC/Rev	Optional BH-7000-00
BH-7006-01-26	AB-1488	3770 psi / 260 bar	208-230 VAC, 2HP, 1PH, 3450 RPM	1.6CC/Rev	Optional BH-7000-00



OPTIONAL EASY ADAPTATION KIT

Order: BH-7000-00

CONTENTS

(1) BH-7000-02	36" Long Hose, 1/4" Hose, 3000 psi, -6 Male End and -6 Swivel Female End
(1) BH-7000-06	Male 90° Elbow, -6 JIC to -SAE Straight Thread, Zinc Plated Steel
(1) BH-7000-07	Swivel Nut Branch Tee, -6 Male to -6 Male to -6 Female Swivel Out, Zinc Plated Steel
(1) BH-7000-08	8" Long, 1/4" Hose, 3000 psi, -6 Male End and -6 Swivel Female End
(1) BH-7000-09A	24" Cable Tie, 0.36" Wide

* BH-7006-01-22/26 1.5 GPM@3190 to 3770 PSI

HYDRAULIC CIRCUIT

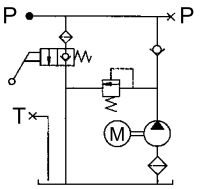

ELECTRIC CIRCUIT

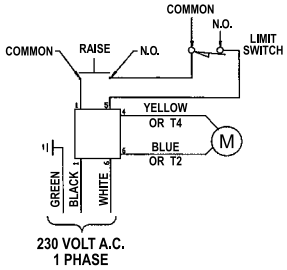

Other Power Unit Options Available!

Call SVI Today: 800-321-8173

All names, numbers, symbols and descriptions are used for reference purposes only. It is not implied that any part listed is the product of these manufacturers. SVI does not represent and is not associated in any way with any other companies.

The Best Protection Available!

DURABLE • IMPACT RESISTANT

Just one damaged door can cost
3 times as much as a simple investment
in one doorjammerPRO™.

doorjammerPRO™

ELIMINATE COSTLY DAMAGE!

doorjammerPRO™ protection on your hoists will eliminate door dings, dents, and scratches because it protects the entire area where doors meet the hoists!

REDUCE THE STRESS!

With less damage, you and your technicians can breathe easier!

REDUCE THE LOSS OF DOLLARS!

Less body damage can save you thousands of dollars over the life of doorjammerPRO's™ use.

EFFICIENCY

Technicians find it much easier to enter and exit vehicles on hoists protected with the doorjammerPRO™, resulting in a shop that runs much more efficiently!

CUSTOMER SATISFACTION

Show your customers how much you care about their vehicle. Many top Mercedes, BMW and Porsche dealers use doorjammerPROs™ to protect customer vehicles, why shouldn't you?

INCREASE BOTTOM LINE PROFITS

Less damage and technician peace of mind add dollars where they belong.



Not only does our product protect your technicians, customers and their vehicles, it can improve the appearance of your shop. Less body damage can save you thousands of dollars over the life of the doorjammerPRO™'s use. The doorjammerPRO™ will protect so efficiently that you will be proud to show your customers what you have done to prevent damage to their vehicles.

CUSTOMER SATISFACTION

"Want to tell you what a time saver your hoist protectors are. All the techs in the shop swear by them now. They can enter and exit a vehicle on their hoists without worry and do it in a fraction of the time it used to take. Great Job!"

Stew Grove
Service Manager of Vic Canever Chevrolet



Design Patent Number: D491,332



An Award Winning Product Innovation Award from PTEN



Available in 2 Sizes

BH-7077-02-2S 12" tall x 18" wide
BH-7077-02-2 24" tall x 18" wide



	doorjammer PRO™	Rotary's Door Defender™
Material	15 durometer ***Impact and Energy Absorbing Foam***	70 durometer rock hard rubber extrusion
Weight	2.05 lbs. / 4.1 lbs.	6.6 lbs.
Affords Extra Column Impact Protection	Yes	No
Installation	ScotchTM 300LSE Hi Strength Adhesive	Glue
Private Labeling Available	Yes	?
Thickness	2"	1/2"
Width (Outside)	18-3/4"	12-1/8"
Width (Inside)	13-3/4"	--
Height	Your Choice: 12" or 24"	20"
Applications	Many Types of Lifts	Rotary
Surface Area	225 / 450 sq. inches	246 sq. inches
Finish	Non-Marring Material	Marring Material

SVI International, Inc.
155 Harvestore Drive • DeKalb, IL 60115
BALTIMORE • CHICAGO • LOS ANGELES
800-321-8173 • 815-748-0200
www.**sviinternational**.com

DoorJammerPRO™ is an SVI International, Inc. Product

All names, numbers, symbols and descriptions are used for reference purposes only. It is not implied that any part listed is the product of these manufacturers. Entire Contents ©2021, SVI International, Inc.





ADJUSTABLE TURF AND UTILITY TRAYS

FOR 2-POST LIFTS
SYMMETRIC / ASYMMETRIC

ADJUSTABLE WIDTH SYMMETRIC — **AWS**

ADJUSTABLE WIDTH ASYMMETRIC — **AWA**

UNIVERSAL STYLE TURF TRAYS FOR 2-POST LIFTS

2800 LB CAPACITY (1400 LB / TRAY)

It couldn't be any easier—
very few, if any measurements
are needed when ordering
AWA or AWS TURF TRAYS from SVI!

Ideal for Shops with Multiple Types of 2-Post Lifts



SVI International, Inc.
155 Harvestore Drive • DeKalb, IL 60115
800-321-8173 • 815-748-0200
E-Mail: parts@sviintl.com
www.sviinternational.com

BALTIMORE • CHICAGO • LOS ANGELES

DIRECT FIT™ BRAND

SVI International, Inc.

Catalogs and Information Online: **www.sviinternational.com**

EASY TO ORDER:
800-321-8173
815-748-0200
Fax: 800-899-1784 • 815-748-0210
E-Mail: parts@sviintl.com
www.sviinternational.com

AUTO LIFT REPAIR PARTS FOR ALL MAKES & MODELS

~NO MATTER THE AGE OF THE LIFT!

- Arm Restraint Kits & Parts
- Cables—Lifting and Equalizing
- Chain
- doorjammerPRO - Door Protection Pad
- Height Extensions and Rubber Pads
- Installation Products & Tools
- Power Units and Parts
- Pulleys and Chain Rollers
- Seal Kits for In-Ground & Surface Mount
- Safety Legs / Non-Rotators
- Replacement Lift Kits
- Power Post Lifting Systems
- Tanks for In-Ground Lifts
- Turf Attachments for 2-Post Lifts

SURFACE MOUNT LIFT PARTS FOR:

Acanus	Gemini	Quality
Ammco®*	Gilbarco	Ranger
Alamo /	Globe	Ravaglioli
ASSSA	Grand	Rotary Lifts
ALM	Hofmann	Silent Tech
AMI	Hydralift	Slift
Ashawa	Ime Istobal	Somers Souriau
Ben Pearson	Kismet	Stenhoj
BendPak	Kimm	Stertil Koni
Benwil	Koni	Sun
Bishamon	Launch	Tecalemit
Boston	Laycock	Titan
Bradbury	Lincoln	Weaver
Cascos	Maha	Werther
Consul	Manitowoc Lifts	Western
Challenger	Mohawk	Westinghouse
Force	Nussbaum	Wheeltronic
Ford Smith	OMA	Worth
Forward	OMCN	Zippo
Fuchs / Zippo	PMW	

IN-GROUND LIFT PARTS FOR:

Benwil	Gilbarco	PKS Lifts
Challenger	Globe	Rotary
Cochin	HDL/ISS Innovative	US Hoist
Curtis	Joyce	Weaver
Ford Smith	Manitowoc Lifts	Western

AIR COMPRESSOR PARTS

- Air Receiver Tanks • Compressor Mufflers
- Automatic Tank Drain Valve for Champion Compressors
- Filters—Many OEM Ref Available!
- Filters, Regulators, Lubricators
- Intake Filter Products
- Milton Air System Products
- Re-Coil Hose • Valves
- Vibration Dampening Pads & much more!

BRAKE LATHES REPAIR PARTS

- Brake Lathe Repair Parts and Accessories for **All Makes** ORELS

EXHAUST REMOVAL SYSTEMS & PRODUCTS

FLUID DELIVERY

- Lenz Fittings
- Steel Hydraulic Line Tubing and Fittings
- Strut and Hangers

HOSE REELS BY REELCRAFT®

HYDRAULIC CYLINDERS—

- Custom Single-Acting Large Bore Cylinders
- Also see "Lifting Equipment"

LIFTING EQUIPMENT

- New In-Ground Lifts—Car, Truck & Bus
- Small Equipment Shop Maintenance (SESM) Lifts for lifting Landscape Equip. ATVs / UTVs, Motorcycles, Lawn Mowers, Golf Carts and More!
- Custom Lifting Equipment incl. Production Line Lifts, Rail Car Lifts and More
- Custom Hydraulic Cylinders for Various Applications
- Turf Attachments for 2-Post Lifts
- In-Ground Lift Sections and Kits
- And more!

LUBRICATION & PAINT / FOAM SPRAY REPAIR PARTS & KITS FOR:

- Alemite • ARO • Balcrank • Graco • Lincoln

PETROLEUM EQUIPMENT & REPAIR PARTS FOR:

- Gas Pump & Meter Kits and Parts for Gasboy • Tokheim • Fill-Rite
- Including Parts for Older Pumps: Wayne • Bennett • Gilbarco • Bowser A.O. Smith (Geosource) • Southwest

SEAL KITS

SHOP EQUIPMENT

- Hein-Werner Products • Omega Products
- Porto-Power • Pro-Lift

TIRE EQUIPMENT REPAIR PARTS

- Tire Changer and Wheel Balancer Parts for **All Makes**

Accu-Turn	FMC	Nussbaum
All Tool	Giuliano	Ranger
Ammco®*	Hofmann	Sicam
BaseLine®*	Hunter	Sice
Bosch	John Bean /	Snap-On
Cemb	(JBC)	Teco
Coats®*	Kwik-Way	Tuxedo
Corghi	Launch	

VALVES

- Air Compressor Valves of All Types
- Air and Hoist Control Valves
- Ball Valves • Check Valves
- Kingston Valves • Pressure Relief Valves
- Relief Valves • Safety Valves
- Solenoid Valves
- Tire Changer Valves • And More!

CUSTOM PRODUCTS

And let us know if you want something you use in your shop to be added to our product line!

DIRECTFIT™ In addition to SVI's Direct Fit™ Brand, we are proud to be a one-stop shop for many other great products including:

ALWITCO, B-Line by EATON, Blackhawk Automotive, COILHOSE PNEUMATICS, CONRADER, CRUSHPROOF TUBING CO., HEIN-WERNER AUTOMOTIVE, Jefferson, KINGSTON, LENZ, Milton, MLM, OMEGA, Porto-Power BLACKHAWK AUTOMOTIVE, Pro-Lift, REELCRAFT, SIMPSON Strong-Tie, SOLBERG, SPX, VPS and many more!

3 Ready-Ship Warehouses for Faster Shipping! | **BALTIMORE • CHICAGO • LOS ANGELES**

Main Office: 155 Harvestore Drive • DeKalb, IL 60115

All names, numbers, symbols and descriptions are used for reference purposes only. It is not implied that any part listed is the product of these manufacturers.
SVI does not represent and is not associated in any way with any other companies. Entire contents copyright © 2021, SVI International, Inc. Prices subject to change without notice.
*AMMCO, BASELINE, COATS and DUCKHEAD are registered trademarks of Hennessy Industries, Inc. SVI International, Inc. is not associated in any way with Hennessy Industries, Inc.

TERMS AND CONDITIONS OF THE
SALES ORDER
FOR SVI INTERNATIONAL, INC.

1. **GENERAL**. The terms and conditions of sales order outlined herein shall apply to the sale by SVI INTERNATIONAL, INC. (hereinafter referred to as "Company") of the items described on the facing page (hereinafter referred to as "Merchandise") to Purchaser.
2. **DELIVERY**. Delivery shall be deemed to be complete when the Merchandise has been shipped F.O.B. Company's plants in DeKalb, Illinois, Montclair, California; and Hanover, Maryland ("Company's plants"). Shipments are subject to delays from causes or contingencies beyond the reasonable control of the Company. When otherwise not specified, shipments will be made in standard containers via carrier which, in the judgment of the Company, will result in the most practical method. Title and right of possession will pass to the Purchaser upon receipt by the carrier at the shipping point. If a customer of the Company should specify a specific carrier's method of shipment (i.e. UPS Next Day Air) and that carrier does not perform to the customer's expectations, freight credit to a customer's account will not be issued unless the Company can first obtain a credit.
3. **RISK OF LOSS**. Identification of the Merchandise under Uniform Commercial Code (hereinafter referred to as "UCC") Section 2-501 shall take place at the moment of shipment F.O.B. Company's plants. Risk of loss shall pass to the Purchaser when the Merchandise is shipped from the Company's plants.
4. **TITLE**. Title to the merchandise shall transfer to the Purchaser when the Merchandise is shipped from the Company's plants.
5. **WARRANTIES**. The Company guarantees its products to be free from defects in workmanship and raw materials for a period of one year from date of purchase. THIS WARRANTY IS EXPRESSLY IN LIEU OF ANY AND ALL WARRANTIES EXPRESS OR IMPLIED. COMPANY DOES NOT WARRANT THE MERCHANDISE IS MERCHANTABLE OR FIT FOR ANY PARTICULAR PURPOSE. Company's liability for breach of the terms of this Agreement, including any warranty, is limited to either refund of the invoice price of the Merchandise or at Company's option, replacement of the Merchandise free of charge, including transportation charges but not including the cost of labor. Purchaser has not relied on any statement or upon the conduct of Company with respect to the prospective use of the merchandise. Company shall not be liable for and Purchaser waives any and all claims for any loss or damage, directly or indirectly, arising from the use of the Merchandise and for punitive, incidental or consequential damages, including, but not limited to, damages to property, for loss of use, loss of time, loss of profit or loss of income. The Company does not authorize the sale of our products under any other warranty, expressed or implied. **Please note:** Electrical components and cylinder or shaft seals are not covered under warranty.
6. **SETOFF**. All claims for money due or to become due from the Company shall be subject to deduction by the Company for any setoff or counterclaim arising out of this or any other claims of the Company or its affiliated companies, whether such setoff or counterclaim arose before or after any assignment by Purchaser.
7. **INDEMNIFICATION**. Purchaser agrees to indemnify the Company and hold it harmless from and against all claims, liability, loss, damage or expense, including reasonable counsel fees, arising from or by reason of any modifications or alterations made by Purchaser. If a customer of the Company modifies or alters any part, in any manner whatsoever, or uses any part in departure from recommended performance specifications, said customer agrees to indemnify and hold the Company harmless from and against all liability and expenses based on damage to property or injury to or death of any person arising out of or attributable to such modified or altered part. Further, the Company will not accept any such modified or altered part for credit to a customer's account.
8. **FREIGHT POLICY**. Freight charges are prepaid and added to invoice or collect FOB shipping point. Note: All customers are responsible for all carrier shipping costs, fees, surcharges, etc. including order refusal and return fees.
9. **RETURN POLICY**. To return a part for credit or inspection, Purchaser must first contact our Main Office in Illinois, to obtain a Return Merchandise Form. Once Purchaser has obtained this form, the parts can be returned freight prepaid only. The Return form must be included with the shipment. Parts returned to the Company without the approved form will be returned freight collect to the shipper or refused. Returns must be initiated within 30 days of the invoice date. The Return Forms are valid for 30 days, from the date of issue. All Returns are subject to restocking charges. Return parts brought into our remote warehouses, will not be accepted by our personnel, without a Return Merchandise Form from the Main Office. Parts which have been used in any way or manner, including any installation or incorporation into a lift, hoist, or other equipment, shall NOT be eligible for return whether or not a Return form has been assigned. **Please note:** Electrical parts or components are not returnable for credit. This includes all switches, pushbuttons, relays, electric motors, capacitors, fuses, solenoids, power units with wiring issues or any other electrical items. Custom, built to order, special order, and non-stocked genuine parts are non-returnable.
10. **RESTOCK CHARGE**. Returns are subject to a restocking charge. Refusals are subject to the same restocking charge plus the cost of outbound and return freight charges and/or fees incurred by the Company due to shipment refusal.
11. **PRICES AND PAYMENTS**. All prices are subject to change without notice. All prices are F.O.B. shipping point. The Company standard terms are net 30 days, C.O.D. company check, C.O.D. cash, VISA, MasterCard, Discover or American Express. However, if in the judgment of the Company, the financial condition of the Purchaser at any time does not justify shipment according to standard terms of payment, the Company may require full or partial payment in advance.
12. **INTERPRETATION**. This sales order is intended by the parties as a complete and exclusive statement of the terms of their agreement. It supersedes all prior agreements, written or oral. No course of prior dealings between the parties and no usage of the trade shall be relevant to supplement or explain any terms used in this sales order. Acceptance or acquiescence in a course of performance rendered under this purchase order shall not be relevant to determine the meaning of this sales order even though the accepting or acquiescing party has knowledge of the nature of the performance and opportunity for objection. Whenever a term defined by the UCC is used in this sales order the definition contained in the UCC shall control.
13. **MODIFICATION**. This sales order can be modified or rescinded only by a writing signed by both parties.
14. **WAIVER**. No claim or right arising out of a breach of this sales order can be discharged in whole or in part by a waiver or renunciation of the claim or right unless such waiver or renunciation is supported by consideration and is in writing signed by the aggrieved party.
15. **ASSIGNMENT**. No right or interest in this sales order shall be assigned by either party without the written consent of the other and no delegation of any obligation owed, or of the performance of any obligation by either the Company or Purchaser shall be made without the written consent of the other party. Any attempted assignment or delegation not made in conformity with this paragraph shall be wholly void and totally ineffective for all purposes.
16. **TIME TO PERFORM AND BRING ACTION**. Time is of the essence of this sales order. Any action for breach of this sales order shall be commenced within two (2) years after the cause of action has accrued. Any party who loses any litigation shall reimburse the other party for costs including reasonable attorney's fees. The exclusive jurisdiction for any legal action shall be the Circuit Court of DeKalb County, Illinois.
17. **APPLICABLE LAW**. This sales order shall be governed by the UCC of Illinois as effective and in force on the date of this sales order.

BALTIMORE • CHICAGO • LOS ANGELES








- Air Compressor Parts and Filters
- Auto Lift Parts for Any Brand
- Auto Lift Cables and Chain
- Auto Lift Power Units and Parts
- Auto Lift Sheaves / Pulleys and Chain Rollers
- Brake Lathe Repair Parts for All Makes
- Exhaust System Products
- Fluid Delivery Repair Parts
- Hose Reels and Hose Stops
- In-Ground Auto Lifts
- Lubrication Equipment Repair Parts
- Petroleum / Service Station Pump and Tank Products
- Repair Parts for Gasboy Consumer Series
- SESM Lifts for ATV/UTV, Golf Cart and More!
- Tire Changer Repair Parts
- Turf Attachments for 2-Post Lifts
- Vehicle Lifting Systems
- Wheel Balancer Accessories

DIRECTFIT™
SVI's Direct Fit™ Brand

SVI International, Inc.
155 Harvestore Drive • DeKalb, IL 60115

800-321-8173 • 815-748-0200
FAX: 800-899-1784 • 815-748-0210
E-MAIL: parts@sviintl.com

Entire contents copyright © 2021, SVI International, Inc.

Information and Catalogs Online:
www.sviinternational.com