entire contents copyright © 2012 SVI International, Inc.

DTO28 Rack and Pinion Equalizer Kits

SVI worked carefully with a distributor to design a system to extend the service life of DTO28 lifts produced by Rotary. Problems start when floor cleaners and moisture cause the equalizer box to corrode. This results in backfill pouring through the rusted openings and interfering with the equalizer operation, thus hanging the lift up.

In the past, there were only three ways to deal with the problem. You either excavate and replace the corroded box at great cost, scoop out the backfill every so often or condemn the lift. This is over with SVI's new **Drop-In Rack and Pinion Equalizer Assembly for DTO lifts**.

Order BH-9760-09 Kit for 4" Wide Box
BH-9760-09AL Drop-In Auto Lock for Equalizer Assembly
BH-9760-10 Kit for 4-3/4" Wide Box

Installation is a breeze:

1) Remove the old equalizer frame.
2) Clean out the bottom of the box at the ends so rack guides fit to the bottom.
3) Assemble the new rack bar guide tubes to cross supports, drop in the opening and square up.
4) Assemble the pinion housing and shaft assembly, set in box and line up with the guide tubes.
5) Drill (20) 3/8" holes in the concrete using the pinion housing as a template and bolt housing down using the anchors supplied. **Note:** make sure rack bars mate properly with pinions and fit easily through the housing before drilling and bolting.
6) Install rack bars making sure each starts with the same tooth and bolt to bolster. You may need to elongate the bolt hole in the bolster with a torch so the rack movement is perpendicular to the plunger.
7) Show your customer how good the lift works again and accept thanks for solving the problem.

Detailed Instructions are included with each kit.
(Instruction Sheet: BH-9760-09S)

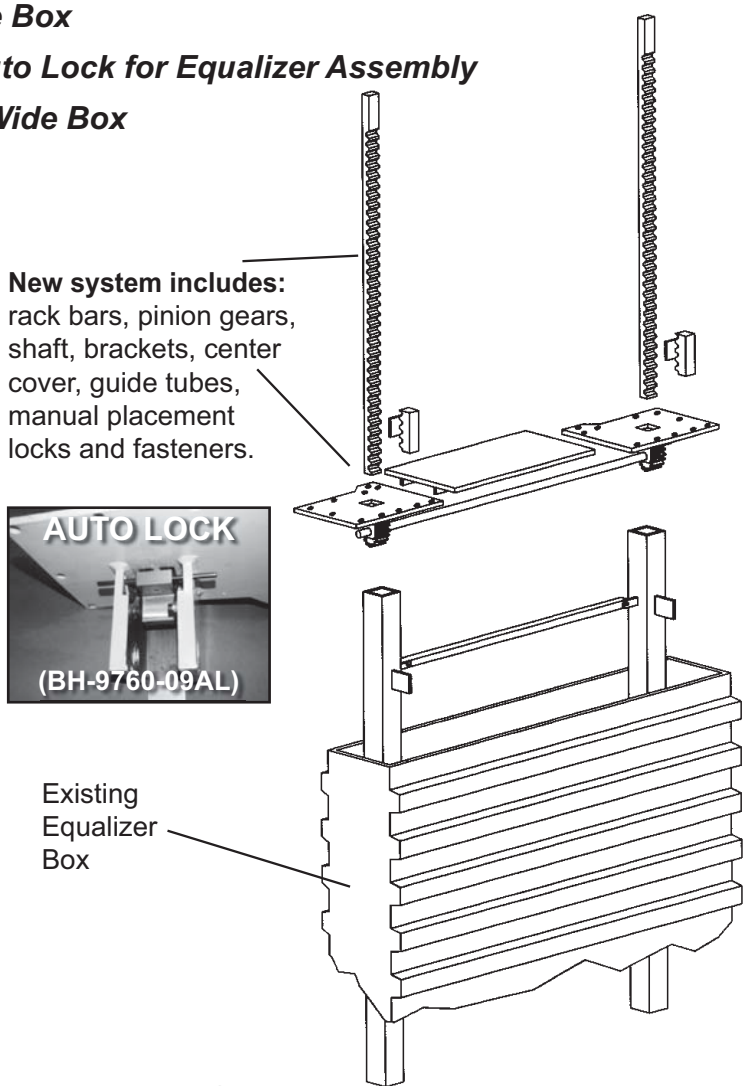

Manual Style Rack Bar Locks

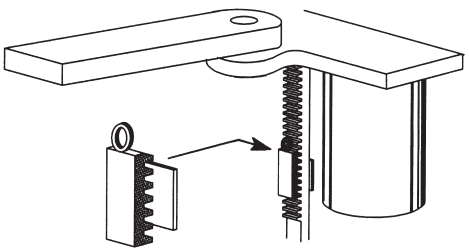

Order: BH-9612ML
Fits Rack Bar:
BH-9612

Manual Rack Bar Lock For:
Side-by-Side Lifts
w/ Square Rack Bar

All names, numbers, symbols and descriptions are used for reference purposes only. It is not implied that any part listed is the product of these manufacturers; however, some parts may be the actual product of these manufacturers.

entire contents copyright © 2012 SVI International, Inc.

Drop In Rack and Pinion Equalizer Upgrade for DTO28 Lifts

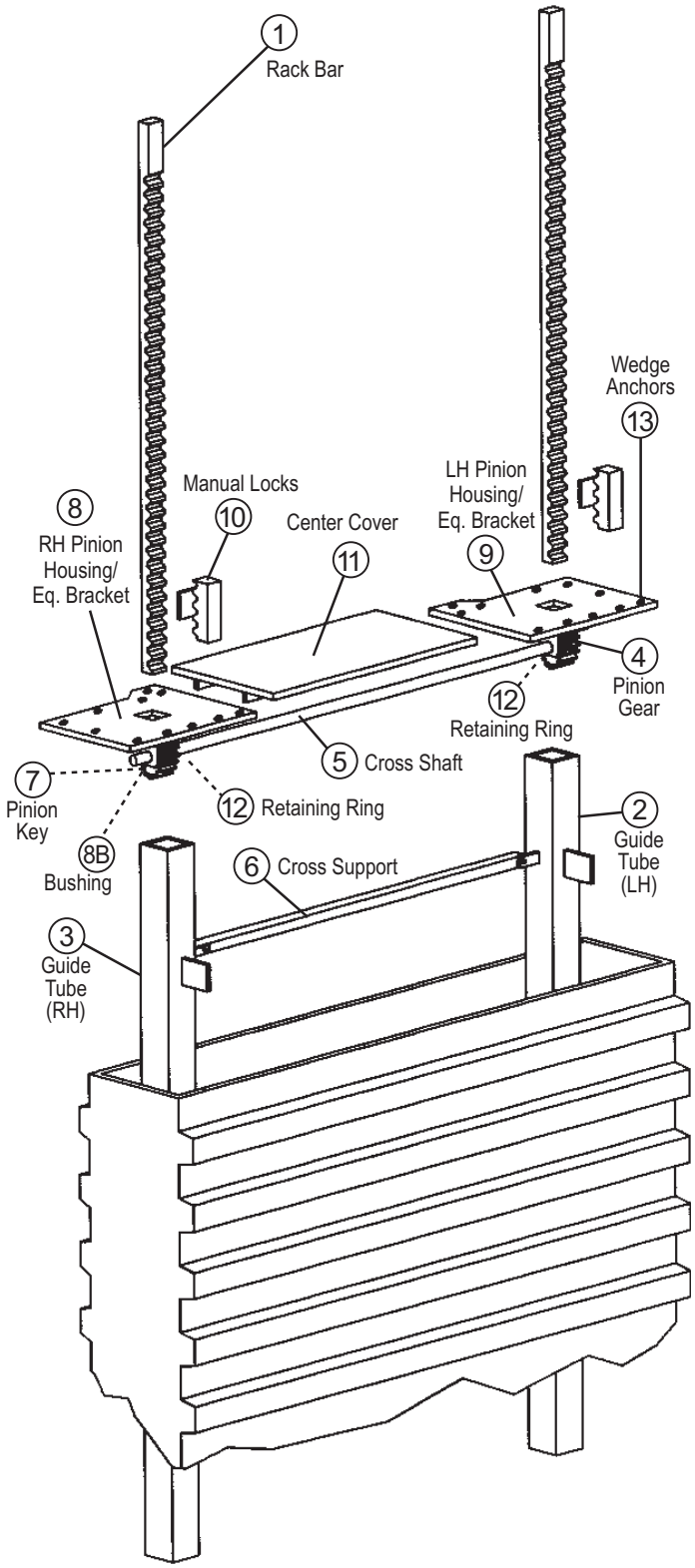

BH-9760-09 For 4" Wide Box
BH-9760-10 For 4-3/4" Wide Box
BH-9760-09AL Auto Lock For 4" Wide Box

Item	SVI Part #	Qty.	Description / (Kit Specified)
1	BH-9760-10R	2	Rack Bar
2	BH-9760-10XE	1	LH Guide Tube (BH-9760-09)
	BH-9760-10XE	1	LH Guide Tube (BH-9760-09AL)
	BH-9760-10E	1	LH Guide Tube (BH-9760-10)
3	BH-9760-10XH	1	RH Guide Tube (BH-9760-09)
	BH-9760-10XH	1	RH Guide Tube (BH-9760-09AL)
	BH-9760-10H	1	RH Guide Tube (BH-9760-10)
4	BH-9112	2	Pinion Gear
5	BH-9760-10C	1	Cross Shaft for Equalizer
6	BH-9760-10J	2	Cross Supports
7	BH-9614-06	2	Equalizer Pinion Key
8	BH-9760-10XB	1	RH Pinion Housing / Eq. Bracket
	BH-9760-10LOC	1	RH Eq. Bracket (BH-9760-09AL)
8B	**Replacement Part:** *(included in original complete items 8 and 9)*		
	BH-9760-09B	4	Bushing for Equalizer Bracket
9	BH-9760-10XA	1	LH Pinion Housing / Eq. Bracket
	BH-9760-10PIA-C	1	LH Eq. Bracket with Lock (BH-9760-09AL)
10	BH-9611ML	1	Any Position Manual Locks (Pair) (BH-9760-09 and BH-9760-10)
11	BH-9760-10XG	1	Center Cover (BH-9760-09 / -09AL)
	BH-9760-10G	1	Center Cover (BH-9760-10)
12	BH-9614-05	2	Retaining Rings
13	F-WA-0375-3750	20	3/8" x 3-3/4" Wedge Anchors
14	BH-7512-90B		Shims (1/16") Pack of 20
Parts/Hardware Not Pictured:			
	F-HC-0375-16-1000	4	3/8"-16 x 1" Hex Head Capscrews
	F-HN-0375-16	4	3/8"-16 Hex Nuts
	F-HC-0500-13-2500	2	1/2"-13 x 2-1/2" Hex Head Capscrews
	F-LW-0500	2	1/2" Lockwashers
	BH-9620-37	1	Adpt Adjusting Handle (BH-9760-09AL)



14 Shim (1/16")

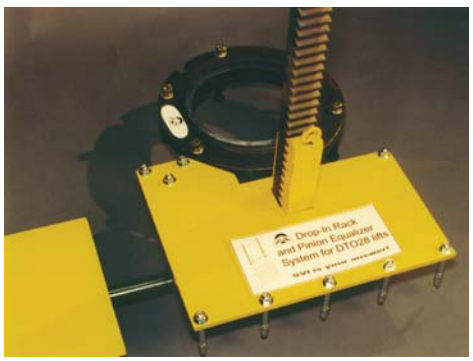

All names, numbers, symbols and descriptions are used for reference purposes only. It is not implied that any part listed is the product of these manufacturers; however, some parts may be the actual product of these manufacturers.