Sanitaryware

SMART LINE

400 KG

Description

Concealed cistern with frame for wall hung pan. Installation in light wall. Includes the fixings kit and connection pipes for the WC.

Finish

100159542

100301541

Certifications and quality characteristiques

BELGAQUA

Technical drawing

Dimensions in mm

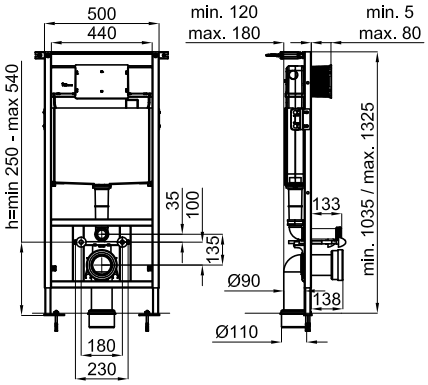

noken
PORCELANOSA BATHROOMS

© 2026 noken | Edition: 19/03/2026 INT Ref.110125.5330684