BENDHEIM WALL SYSTEMS, INC.

WALL-F (FLAT SYSTEM)

ALL DESIGNS PATENTED AND PROTECTED.

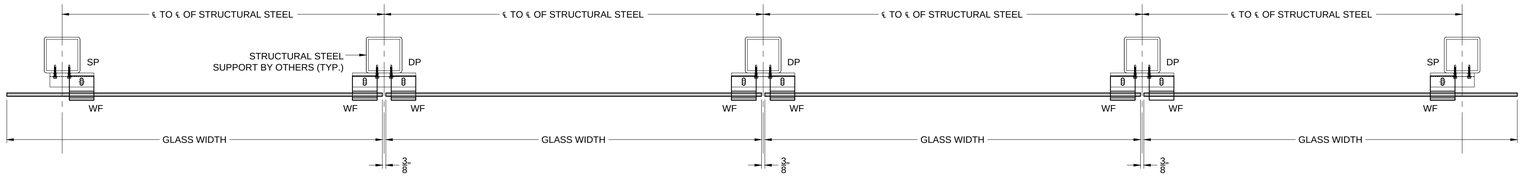

GLASS PANEL PLAN LAYOUT

SCALE $1\frac{1}{2}$" = 1'-0"

ABBREVIATIONS:

WF-T: WALL FLAT TOP
WF-M: WALL FLAT MIDDLE
WF-M: WALL FLAT BOTTOM

SP-L: SINGLE PLATE TO ATTACH FITTINGS AT THE END OF THE WALL (LEFT SIDE)
SP-R: SINGLE PLATE TO ATTACH FITTINGS AT THE END OF THE WALL (RIGHT SIDE)
DP: DOUBLE PLATE TO ATTACH FITTINGS AT THE MIDDLE OF THE WALL

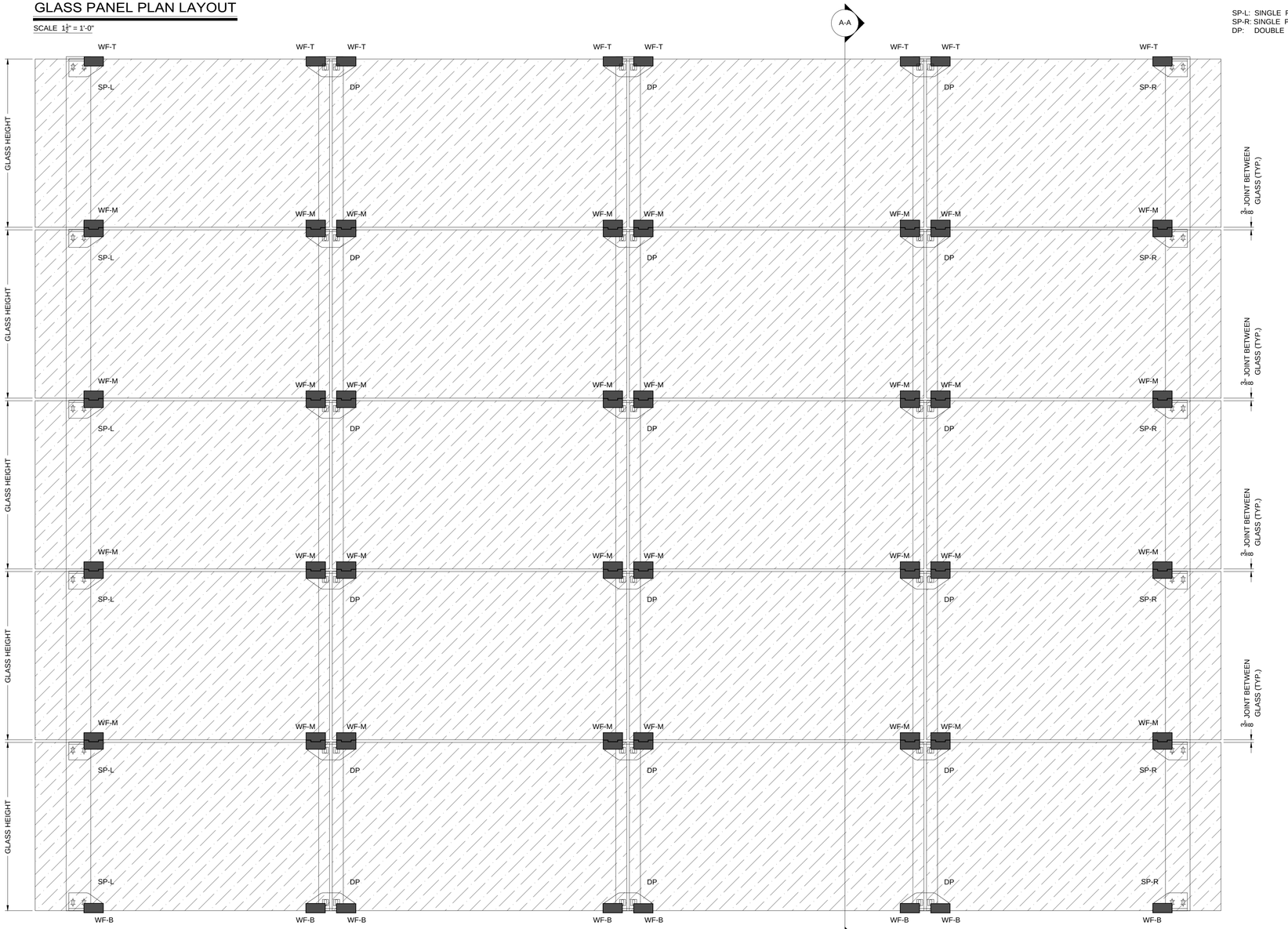

GLASS PANEL ELEVATION

SCALE $1\frac{1}{2}$" = 1'-0"

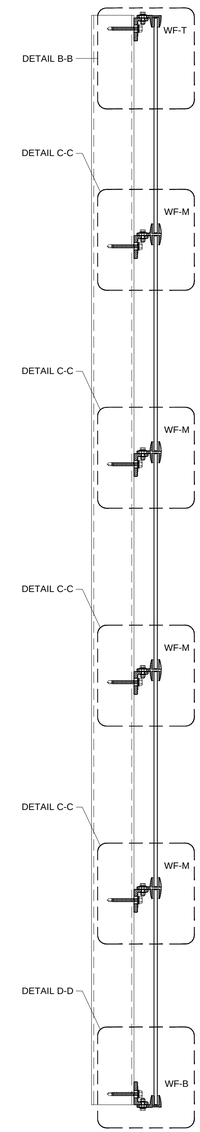

SECTION "A-A"

SCALE $1\frac{1}{2}$" = 1'-0"

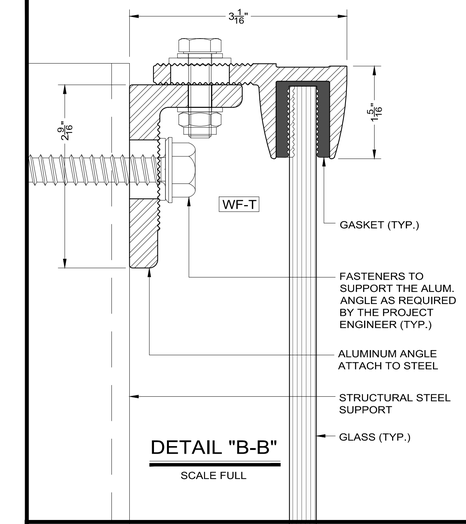

DETAIL "B-B"

SCALE FULL

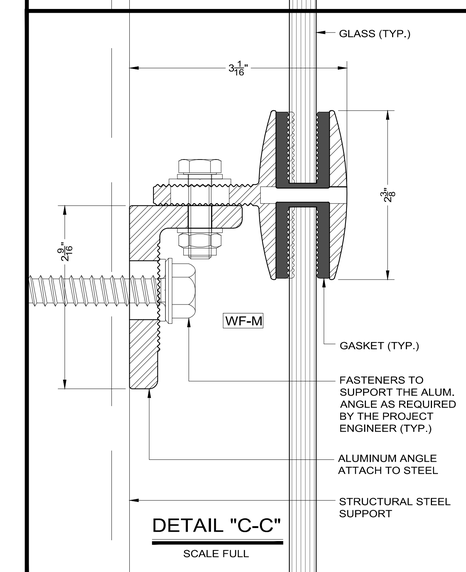

DETAIL "C-C"

SCALE FULL

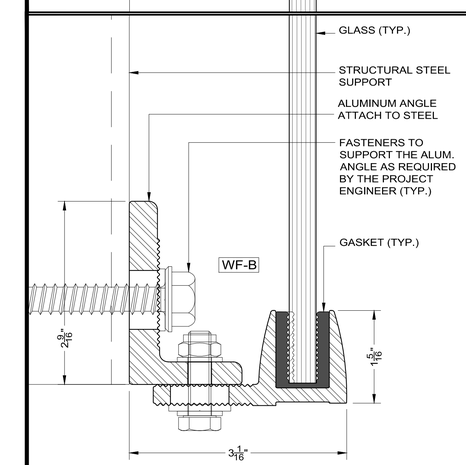

DETAIL "D-D"

SCALE FULL

NOTE:

WALL-F PROVIDES **FLAT** GLAZING PANELS FOR A VENTILATED SYSTEM REQUIRING NO GLASS CUT-OUTS OR HOLES. THE SYSTEM HELPS MINIMIZE THE HORIZONTALLY DRIVEN RAIN FROM ACCESSING THE BUILDING ENVELOPE. SCREWS ARE NOT REQUIRED TO SECURE THE GLASS PANELS TO THE FASTENER SYSTEM.
THE FASTENERS ARE EASY TO ADJUST TO ACCOMMODATE THE FIELD CONDITION. UNLIKE OTHER SYSTEMS, INDIVIDUAL GLASS PANELS CAN BE REPLACED WITHOUT HAVING TO DEGLAZE SURROUNDING PANELS. THE FITTINGS CAN ACCOMMODATE GLASS THICKNESS FROM 1/4" (6 MM) TO 5/8" (16 MM).