# Thermal *Dynamix*, Inc.

## EN15E
## Endothermic gas generator
## 1500 scfh, Electrically heated

**Thermal *Dynamix*, Inc.**
15 East Silver St.
Westfield, MA 01015

# TABLE OF CONTENTS

## OVERVIEW & THEORY OF OPERATION

ENDOTHERMIC-BASE ATMOSPHERES ARE ALMOST UNIVERSALLY ADAPTABLE FOR PROTECTING MOST PRODUCTION STEELS FROM OXIDATION AND DECARBURIZATION. TYPICAL APPLICATIONS INCLUDE:

1. BRIGHT HARDENING OF STEEL OF ANY CARBON CONTENT WITHOUT SCALE, DECARBURIZATION OR CARBURIZATION.

2. ANNEALING AND NORMALIZING OF STEEL OF ANY CARBON CONTENT WITHOUT SCALE, DECARBURIZATION OR CAR BURIZATION.

3. BRIGHT COPPER BRAZING OR SILVER BRAZING OF STEEL OF ANY CARBON CONTENT WITHOUT DECARBURIZATION.

4. CARBON CORRECTION (RESTORATION) OF DECARBURIZED FORGINGS OR BAR STOCK.

5. SINTERING OF POWDER METALLURGY COMPACTS THAT REQUIRE A STRONGLY REDUCING ATMOSPHERE, PARTICU LARLY THOSE OF MEDIUM OR HIGH CARBON, THE MOST LIKELY TO DECARBURIZE.

6. USE AS CARRIER GAS FOR GAS CARBURIZING OR CARBONITRIDING.

DISADVANTAGES OF ENDOTHERMIC ATMOSPHERES INCLUDE THEIR PROPENSITY FOR REACTING WITH CHROMIUM, THEIR EXPLOSIVENESS IN CONTACT WITH AIR, AND THEIR TENDENCY TO PRECIPITATE CARBON (SOOT) AT LOWER FURNACE TEMPERATURES. THEIR READY REACTION WITH CHROMIUM IN STEEL TO FORM A CARBIDE PROHIBITS THEIR USE IN HEAT TREATING MOST STAINLESS STEELS.

THE PRINCIPAL VARIATIONS THAT ARE MADE TO ENDOTHERMIC GAS CONSIST OF THE ADDITION OF EITHER A CARBURIZING OR NITRIDING AGENT, OR BOTH. WITH SIMPLE METERING EQUIPMENT A PERCENTAGE OF METHANE (USUALLY IN THE FORM OF NATURAL GAS OR PROPANE) AND DESIRED QUANTITIES OF AMMONIA ARE ADDED. THESE ADDITIONS ARE USUALLY MADE AT THE FURNACE WHERE VARIATIONS IN LOADING, CYCLE TIME, AND "DOOR OPEN" TIME HAVE A DEFINITE EFFECT ON DEW POINT AND CARBON DIOXIDE CONTENT.

## AIR-NATURAL GAS REACTION

ENDOTHERMIC ATMOSPHERES ARE PREPARED BY REACTING RELATIVELY RICH MIXTURE OF AIR AND HYDROCARBON GAS IN AN EXTERNALLY HEATED ALLOY RETORT IN THE PRESENCE OF A NICKEL CATALYST. ALTHOUGH GENERATORS CAN BE DESIGNED TO SATISFACTORILY CRACK PROPANE OR BUTANE, NATURAL GAS IS THE MOST COMMONLY EMPLOYED. THIS ROLOCK GENERATOR IS DESIGNED TO USE ONLY NATURAL GAS, BOTH FOR THE ATMOSPHERE AND THE HEATING CHAMBER BURNERS.

NATURAL GAS AND AIR ARE METERED AT THE GENERATOR INPUT IN SUCH A PROPORTION THAT THERE IS JUST SUFFICIENT OXYGEN ($O_2$) TO FORM CARBON MONOXIDE (CO) AND HYDROGEN ($H_2$) WITHOUT ANY EXCESS OF CARBON DIOXIDE ($CO_2$) OR WATER VAPOR ($H_2O$). APPROXIMATELY 2.5 VOLUMES OF AIR TO ONE VOLUME OF GAS IS USED.

BECAUSE NATURAL GAS IS COMPOSED CHIEFLY OF METHANE ($CH_4$), THE OVERALL CHEMICAL REACTION TAKING PLACE IN THE ENDOTHERMIC GENERATOR CAN BE EXPRESSED AS FOLLOWS:

$$\underset{(6.8\ \text{MOLS})}{2CH_4 + O_2 + 3.8N_2} \rightarrow \underset{(9.8\ \text{MOLS})}{2CO + 4H_4 + 3.8N_2}$$

THE REACTION RESULTS IN AN INCREASE OF 3 MOL VOLUMES; THUS, THE GENERATOR PRODUCES MORE GAS THAN IT CONSUMES. IF A NATURAL GAS COMPOSED OF 100% METHANE WERE USED, THE OUTPUT FOR THE GENERATOR WOULD BE 1.44 TIMES THE TOTAL INPUT OF AIR AND GAS. ALSO FOR EVERY 2 MOL VOLUMES OF $CH_4$, 4.8 MOL VOLUMES OF AIR ARE REQUIRED FOR CRACKING, INDICATING AN AIR-TO-GAS RATIO OF 2.4. THIS IDEALIZED GAS ANALYSIS WOULD BE:

$$CO = 20.4\%$$
$$H_2 = 40.8\%$$
$$N_2 = 38.8\%$$

HOWEVER, SINCE NATURAL GAS IS NOT COMPOSED OF 100% $CH_4$, SOME VARIATION FROM THE ABOVE RESULTS MUST BE ANTICIPATED. THE ACTUAL GENERATOR YIELD WILL BE CLOSER TO 1.35 TIMES THE TOTAL INPUT OF AIR AND GAS. A TYPI-

CAL EXAMPLE OF AN ACTUAL VOLUMETRIC ANALYSIS OF GENERATOR OUTPUT FOLLOWS:

$$CO = 20.4\%$$
$$H_2 = 38.5\%$$
$$N_2 = 39.6\%$$
$$CH_4 = 0.5\%$$
$$CO_2 + H_2O = 1.0\%$$

THE CARBON MONOXIDE (CO) CONTENT OF THE GAS, BESIDES BEING A HIGH REDUCING AGENT, IS ALSO A SOURCE OF CARBON THAT DURING HEAT TREATING WILL ACT AS A CARBURIZER FOR CERTAIN GRADES OF STEEL, WILL PREVENT LOSS OF CARBON ON GRADES OF STEEL, AND WILL REDUCE THE RATE OF CARBON LOSS ON STILL HIGHER CARBON STEELS. THE LIMITS OF ITS EFFECT WILL DEPEND GREATLY ON THE AMOUNTS OF CARBON DIOXIDE AND WATER VAPOR WHICH ARE PRESENT, ON THE TEMPERATURE OF THE OPERATION AND ON THE TYPE OF STEEL BEING TREATED.

HYDROGEN ($H_2$) IS A STRONGLY REDUCING AGENT AND AS SUCH IS DESIRABLE EVEN THOUGH, IN MOST CASES, LESS HYDROGEN WOULD BE FAVORED BECAUSE ITS QUANTITY MAKES THE GAS EXTREMELY ACTIVE AND EXPLOSIVE.

NITROGEN ($N_2$) IS BASICALLY AN INERT ELEMENT IN THE GAS AND VERY GOOD AS A DILUTANT.

THE UNCONVERTED HYDROCARBONS ($CH_4$) ARE VERY OBJECTIONABLE, BUT ONLY DUE TO THE FORMATION OF SOOT. THIS MAY GIVE TROUBLE IN PIPE LINES AND MAY CAUSE SOOTING OF THE CATALYST AS DETAILED IN SECTION C.

BOTH CARBON DIOXIDE ($CO_2$) AND WATER VAPOR ($H_2O$) ARE DECARBURIZING AGENTS. WHEN HELD TO A MINIMUM THEY ARE OFFSET BY OTHER ELEMENTS IN THE GAS AND DO NOT PRESENT A SERIOUS INTERFERENCE TO MOST EXPECTED USES.

## CATALYST BED

THE GENERATOR RETORT IS FILLED WITH CATALYST OF THE POROUS REFRACTORY-BASE TYPE, IMPREGNATED WITH NICKEL OXIDE. CLEAN, ACTIVE CATALYST IS EXTREMELY IMPORTANT FOR ACCURATE CONTROL OF DUE POINT AND CARBON POTENTIAL.

FOR A COMPLETELY REACTED GAS CONSISTENT ANALYSIS, THE TEMPERATURE OF THE CATALYST BED INSIDE THE RETORT SHOULD BE APPROXIMATELY 1800°F. TO 1850°F. TO OBTAIN THIS TEMPERATURE, IT IS NECESSARY TO MAINTAIN THE HEATING CHAMBER AT APPROXIMATELY 1900°F OUTSIDE THE RETORT. IF THE TEMPERATURE IS NOT HIGH ENOUGH AND THE GAS IS NOT COMPLETELY REACTED, THE CATALYST WILL SOOT. AS THE CATALYST BEGINS TO SOOT, IT BECOMES LESS EFFECTIVE, AND THE GAS COMPOSITION WILL DRIFT, RESULTING IN MORE METHANE AND HIGHER PERCENTAGES OF CARBON DIOXIDE AND WATER VAPOR IN THE ATMOSPHERE.

ANOTHER FACTOR AFFECTING THE CARBON BUILD-UP IN THE CATALYST BED IS THE CARBON POTENTIAL OF THE ATMOSPHERE BEING PRODUCED. AS THE PERCENTAGES OF THE CARBON IN THE GAS INCREASES SO DOES THE AMOUNT OF SOOTING.

WHEN THE CARBON DEPOSITS REACH A LEVEL WHERE THE QUALITY OF THE ATMOSPHERE PRODUCED IS AFFECTED, A "CARBON BURNOUT " OF THE CATALYST BED IS REQUIRED. THE PROPER CARBON BURNOUT PROCEDURE IS DESCRIBED IN THE OPERATION SECTION OF THIS MANUAL.

AFTER PASSAGE THROUGH THE CATALYST FILLED RETORT, THE REACTION IS "FROZEN" BY IMMEDIATELY COOLING THE GASES TO BELOW 600°F. IN AN AIR COOLED HEAT EXCHANGER. THIS PREVENTS THE REACTION FROM REVERSING AND FORMING CARBON (C) AND CARBON DIOXIDE ($CO_2$) FROM CARBON MONOXIDE (CO):

$$2\ CO \rightarrow C + CO_2$$

THE REACTION IN THE DIRECTION INDICATED PREDOMINATES AT TEMPERATURES OF 1300°F TO 900°F.

TEMPERATURE OF THE ENDOTHERMIC GAS AT THE GENERATOR OUTPUT WILL VARY WITH AMBIENT TEMPERATURE AND OUTPUT VOLUME. TEMPERATURES AT MAXIMUM OUTPUT ARE NORMALLY BETWEEN 150°F. AND 200°F. AND DROP AS THE OUTPUT VOLUME IS DECREASED.

## ATMOSPHERE DEW POINT (CARBON POTENTIAL)

For any given analysis of carbon or alloy steel, there is an endothermic gas composition (measured by its dew point) which is in equilibrium with the carbon content of the steel at a given temperature.

Curves showing the relationship between dew point of endothermic atmosphere, carbon content of steel, and temperature have been worked out by various investigators. A chart representing the average of a number of these investigations is given on page D.2.

The air-to-gas ratio can be altered slightly to vary the dew point over a certain range without appreciably affecting its carbon dioxide or residual methane contents. The THERMAL DYNAMIX endothermic generator is designed to be operated over a range of 30°F. to 90°F. dew point.

Operation above 90°F. dew point with an abnormally high air-to-gas ratio will make the chemical reaction in the catalyst bed exothermic (releasing heat) instead of endothermic (requiring heat). This can raise the temperature in the catalyst bed to a point where the catalyst is destroyed and damage can occur to the retort itself. Such a mixture is readily detected because it produces a gas to wet the measure with dew point sensing equipment and water condenses in the gas cooler and/or piping from the generator to the furnace.

## ATMOSPHERE CONTROL SYSTEM

The atmosphere pump pulls in an air /gas mixture and pumps it through the generator. This pump is a rugged regenerative blower, constant volume machine designed to operate in tandem with a carburetor to precisely set the air/gas ratio of the mixture. The compressor induces a suction on the carburetor causing the air and gas flows with a ratio set by the control knob on the carburetor to be drawn thru the corresponding flowmeters and discharged at desired pressure into the retort..

The trim gas flowmeter has a built in flow valve to make small changes in the air / gas ratio easy to make. Variable speed control of the compressor is provided to work in conjunction with a pressure transducer to maintain a constant outlet pressure of the endo gas as required by your system. Only enough gas is generated that is demanded by the process. No gas is wasted by venting out under normal conditions. Turndown of up to 100% is possible.

As explained in section B, the generator output will be approximately 1.35 times the volume of the air / gas input mixture. Therefore, the volume of the atmosphere being produced by the generator will equal the sum of the flow through the gas orifice meters multiplied by 1.35.

The air / gas ratio of the input mixture will equal the sum of the flow through the air flow meter divided by the flow through the two gas flow meters.

Ex. 106 cfh gas + 264 cfh air =360 cfh total input.
Multiply this by 1.35 = 486 cfh output.
So, 264 cfh air div. by 106 cfh gas = 2.5:1 ratio.

The air intake is filtered through a filter / silencer with a replaceable filter cartridge. This filter must be kept clean or the ability to control the air / gas ratio will be impaired.

Natural gas is delivered to the pump through the main gas train with the Safety Shut-off valve and pressure regulators..

The standard atmosphere control system uses a backpressure regulator at the generator output to limit the atmosphere pressure. The regulator is normally supplied with a pressure range of .5 to 3 psi. The maximum pressure allowable in the standard retort is 5 psig. For any higher pressure application, consult the factory.

As explained above, the atmosphere pump is a variable volume device. Without the backpressure regulator, a restriction in the generator prior to the pressure transducer could damage the retort due to high pres-

TO HIGH PRESSURE AND/OR DAMAGE THE PUMP DUE TO RESTRICTION FLOW. ANY MALFUNCTION ALLOWING EXCESSIVE PRESSURES IN THE SYSTEM SHOULD EXHAUST THRU THE BURNOFF PIPE. THE BURNOFF PIPE IS LOCATED AFTER THE HEAT EXCHANGER DOWN STREAM FROM THE PRESSURE TRANSDUCER AND PARALLEL TO THE PROCESS FLOW LINE.

SHOULD ATMOSPHERE VOLUME REQUIREMENTS BE REDUCED FOR AN EXTENDED PERIOD OF TIME, THE GENERATOR OUTPUT MAY BE REDUCED BY REDUCING THE OPERATING SPEED OF THE ATMOSPHERE PUMP. THE VARIABLE FREQUENCY DRIVE CAN BE PROGRAMMED WITH A LOWER TOP SPEED. SEE DRIVE CONTROL MANUAL FOR INSTRUCTIONS TO DO THIS.

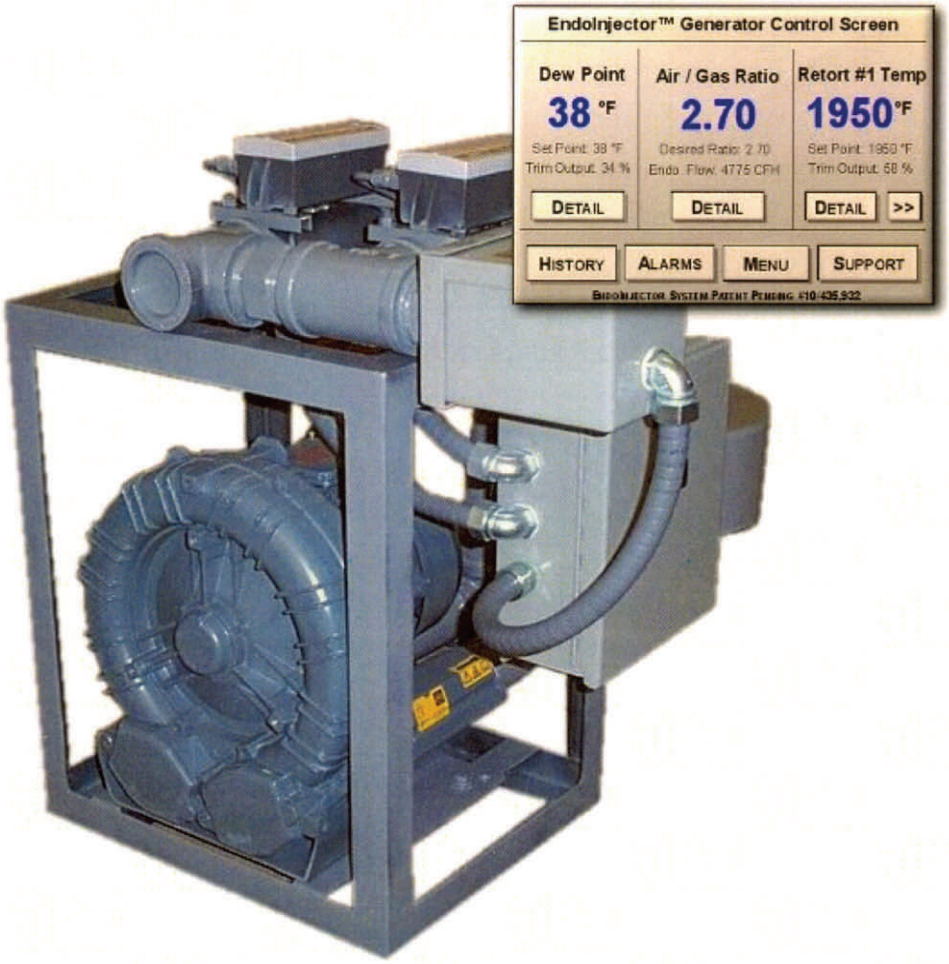


THE ENDOINJECTOR™ IS A PRECISION GAS MIXING SYSTEM DESIGNED SPECIFICALLY TO PROVIDE AN ACCURATELY CONTROLLED MIXTURE OF AIR AND GAS FOR ENDOTHERMIC GAS GENERATORS. THE SYSTEM INCLUDES THE CONTROLCARB™ GAS CONTROL SYSTEM DESIGNED BY ATMOSPHERE ENGINEERING TO UTILIZE ELECTRONIC FLOW MEASUREMENT AND PRECISION GAS INJECTION VALVES TO CONSTANTLY PROVIDE THE IDEAL GAS MIXTURE FOR HIGH QUALITY ENDOTHERMIC GAS GENERATION.

THE ENDOINJECTOR™ INCORPORATES THE LATEST TECHNOLOGY IN REGENERATIVE BLOWER DESIGN THAT IS CAPABLE OF SIGNIFICANT TURNDOWN FOR MULTI-RETORT GENERATORS. WHEN COMBINED WITH THE PRECISE TRUETRIM™ SOFTWARE, THE ENDOINJECTOR™ DELIVERS FLOW ON DEMAND THROUGHOUT THE WORKING RANGE OF ANY GENERATOR DOWN TO 20% OF RATED CAPACITY. THIS FEATURE ELIMINATES ENDOTHERMIC GAS WASTE DURING PRODUCTION WHILE MAINTAINING THE PRECISE GAS MIXTURE REQUIRED.

THE ENDOINJECTOR™ COMES FACTORY ASSEMBLED AND TESTED TO PERFORM TO THE EXACT SPECIFICATIONS REQUIRED BY THE ENDOTHERMIC GAS GENERATOR.

TECHNICAL ASSISTANCE ON THE ENDOINJECTOR IS AVAILABLE FROM THE ATMOSPHERE ENGINEERING COMPANY
PHONE:: 414-331-2457 FAX: 414-332-2457 EMAIL: SUPPORT@atmoseng.com

# INSTALLATION OF A THERMAL DYNAMIX ELECTRICALLY HEATED ENDOTHERMIC GENERATOR

1. All Thermal Dynamix electrically heated endothermic generators, regardless of size and capacity, are substantially identical in operation and behavior. The process of dissociating or "cracking" a gas into its constituent parts is, from an operating standpoint, relatively simple. For that reason, this manual is applicable to all TDI electrically heated endo generators. Unique or special configurations are addressed by the addition of "insert sheets" at the back of this manual reflecting the information specifically relating to a particular system.

2. Unless otherwise requested TDI generators are normally shrink wrapped for protection from the elements during transit. The integral base eliminates any need for a skid or cribbing. On the larger units (6000 cfh and above) the heat exchangers may be packed and shipped separately.

3. Carefully inspect the unit and all components for possible damage in transit. Immediately report any components that were damaged in transit to the freight carrier for reimbursement. Contact Thermal Dynamix for replacement parts.

   Note: Even though TDI may have assisted in the shipping arrangements and may have suggested a freight carrier as appropriate, the generator was sold "FOB your truck at our dock". Ownership, title and risk of loss was transferred to you as soon as the dissociator was loaded on the freight carriers truck.

4. Set generator in place. Allow at least 2 feet clearance at sides and back for service. The generator should be accessable by fork lift on at least one side. A minimum of 7 feet of clearance is required above the generator for removal of the retort(s).

5. The control panel enclosure contains the temperature controls, SCR power controller, main fuse disconnect, safety contactor, control relays and alarm lights and horn. These components are all hardwired in place and are ready for operation. Check them to ensure none has come loose during shipment. The Two thermocouples and their leads may also be packed in the panel enclosure.

6. If the thermocouples have been removed for shipment slide each t/c into its port on the shell and into the heating chamber until the t/c bottoms on the retort. Then withdraw it about 1/4" and tighten the compression nut. Connect the thermocouples to the control panel by the patch cords. The 2 thermocouples are identical. The top port in the shell is for the over-temp limit. The bottom port is for temperature control.

7. Connect the feedstock gas supply to the generator gas inlet. Gas pressure at the retort is not to exceed 28" w.c. A gas pressure regulator should be provided to ensure a constant supply pressure.

8. Connect the generator output to furnaces(s) as required.

9. There is a tendency for carbon to precipitate from endothermic gas; especially at low dew points. This can cause serious problems in piping and valves. Clean outs installed at every piping el will enable cleaning of the piping when necessary.

10. The generator can be operated on either 230 volts or 460 volts, 60 Hz. Unless specified otherwise the generator has been connected for 460 volts. To operate on 230 volts:

    A. Replace the motor starter heaters with heaters of the proper current value at 230 volts.
    B. Reconnect the control circuit transformer primary.
    C. Reconnect the atmosphere pump motor at the motor connection box.

11. Connect 3 phase electrical power into the generator electrical enclosure.

12. Check motor rotation by “bumping” EndoInjector Start push button. Reverse any two electrical phase connections to the motor to reverse rotation if required.

13. If the generator is equipped with mechanical flow meters the flow meters are shipped dry and the float assemblies are taped for shipment. Fill with the oil provided per manufacturers instructions.

14. The firecheck valve has been shipped in the closed position. Open the valve per the instruction tag at tached to the firecheck.

# Electric Endothermic Generator
# with
# Dew Point Control System

## Start-Up Procedure

1.0 Familiarize yourself with contents of this manual and the equipment. Pay particular attention to the EndoInjector Operating Instructions section for the temperature controller and high temperature limit control.

The generator has been set up and operated at the factory so the preliminary setting adjustments should be correct for the start-up.

There are four stages in the start-up process. It's important that they be completed in the proper sequence. Do not shortcut the process. The stages are:

A. Dry out of system (No process gas flow).
B. Activation of the catalyst with process gas flow at 6:1 air/gas ratio (16:1 for propane).
C. Preliminary adjustments to process gas parameters (Under manual control).
D. Activation of Automatic carbon control (Turning the system over to automatic).

2.0 Initial Start-up valve settings

2.1 Close the Generator process gas output to furnace(s) valve. Vent the generator burn-off output to a suitable vent for combustible gases.

2.2 Open the gas supply valve to Baso Switch on the burn-off vent and light pilot by pressing and holding the red tab on the Baso Switch while holding an open flame in front of the pilot. The tab must be held until the pilot stays lit upon tab release.

2.3 Open the drain valve at bottom of heat exchanger(s) manifold to drain any condensate from heat exchanger(s). Be careful here because a burnable gas may be present and also because any moisture present may be irritating to the skin. This valve should be opened periodically to check for moisture.

2.4 Close the drain valve.

2.5 Close the flow meter valve to the carbon probe on the SSI box to left of main panel.

2.6 Reset fire check valve by lifting and turning the reset stud (see Operation Bulletin FC-1A).

3.0 Turn electrical power disconnect to generator to the "ON" position. An alarm will sound.

4.0 Press Alarm Silence on the panel.

5.0 Turn the "HEATING ELEMENTS" switch to "ENABLE" to start heating the unit.

6.0 If the unit is equipped with Automatic Dew Point Control, open the flow meter at the SSI box when the chamber temperature reaches operating point.

7.0 Set temperature control set point to 1900°F, bring the unit up to temperature and allow to soak for an hour (this set point should already be in the program as having been set at the factory). It is important to let the unit soak to ensure the temperature *at the center of the retort* reaches the chamber temperature being read on the screen.

The system is now ready for the introduction of process gas and the "activation" of the catalyst.

Page revised 5-25-2010

THE ACTIVE MATERIAL IN THE CATALYST IS NICKEL. IN NEW CATALYST THE NICKEL IS IN THE FORM OF A NICKEL OXIDE. THE OXIDE WILL BE "REDUCED" IN THE INITAL OPERATION AS THE HOT PROCESS GAS COMES INTO CONTACT WITH THE CATALYST. THIS CATALYST ACTIVATION PROCESS USUALLY TAKES SOMEWHERE BETWEEN 1/2 & 2 HOURS AND MAY PRODUCE SOME MOISTURE IN THE FORM OF STEAM AS THE HYDROGEN IN THE PROCESS GAS COMBINES WITH THE OXYGEN IN THE OXIDE. THIS WILL BE OBSERVED AS WATER IN THE DRAINS AT THE BOTTOMS OF THE HEAT EXCHANGERS.

DURING THIS ACTIVATION PROCESS GREAT CARE MUST BE EXERCISED TO AVOID SOOTING OF THE CATALYST. AS THE NICKEL-OXIDE IS BEING REDUCED THE DEW POINT OF THE OUTPUT GAS WILL BE QUITE HIGH; MUCH HIGHER THAN DESIRABLE FOR PRODUCTION GAS. THIS IS NORMAL. THE PROCESS CANNOT BE HURRIED. IT'S GOING TO TAKE 1/2 – 2 HOURS TO COMPLETE. DO NOT SUCCUMB TO THE TEMPTATION TO ADJUST THE MIXTURE BELOW THE 6:1 SETTING (16:1 FOR PROPANE). THERE IS A TENDENCY TO ADJUST THE AIR/GAS RATIO TO COMPENSATE FOR THE TEMPORARILY HIGH DEW POINT. THIS IS A TERRIBLE IDEA. IT CAN RESULT IN AN INSUFFICIENT AMOUNT OF OXYGEN BEING AVAILABLE FOR CONVERSION WHICH WILL RESULT IN SEVERE SOOTING OF THE CATALYST AND RETORT.

ONCE THE CATALYST HAS BEEN "ACTIVATED" CARE SHOULD BE EXERCISED TO PREVENT ITS EXPOSURE TO AIR WHEN THE GENERATOR IS NOT IN OPERATION (THIS "OPERATION" DOES NOT INCLUDE THE BURNOUT PROCEDURE). OTHERWISE, THE CATALYST CAN BECOME RE-OXIDIZED AND WILL NEED REACTIVATION BY THE SAME PROCEDURE BEFORE FURTHER USE.

8.0 START THE ATMOSPHERE PUMP BY PUSHING THE "START" BUTTON. THE PUMP WILL NOT START UNTIL GENERATOR TEMPERATURE REACHES THE LOW SET POINT OF APPROXIMATELY 1850°F.

9.0 THE RATIO SHOULD INITIALLY BE ADJUSTED FOR A 6:1 MIXTURE OF AIR TO NATURAL GAS (OR 16:1 FOR PROPANE). THIS WAS SET AT THE FACTORY BUT SHOULD BE CHECKED AT THIS TIME. THIS AIR TO GAS RATIO SHOULD BE CHECKED FREQUENTLY DURING THE INITIAL CATALYST ACTIVATION PROCESS TO ENSURE THAT THE MIX DOESN'T GET TOO RICH. KEEP THE AIR/GAS RATIO AT AT LEAST 6:1 (16:1 FOR PROPANE).

ENDOTHERMIC GAS IS NOW BEING PRODUCED. AS EXPLAINED ABOVE, THE DEW POINT IS GOING TO BE HIGH FOR AT LEAST A COUPLE OF HOURS UNTIL THE CATALYST IS ACTIVATED. **RESIST THE URGE TO ADJUST THE MIXTURE FOR DEW POINT FOR AT LEAST 4 HOURS**. AFTER ABOUT 1/2 – 2 HOURS THE DEW POINT SHOULD START DECREASING AND SHOULD SETTLE AT SOME NOMINAL LEVEL. WHEN IT DOES SETTLE THE AIR/GAS RATIO (AND DEW POINT) CAN BE ADJUSTED TO THAT DESIRABLE FOR PRODUCTION GAS.

UNDERSTAND THAT THE RICHER THE MIXTURE IS THE GREATER THE TENDENCY WILL BE FOR THE SYSTEM TO SOOT UP. CAREFUL ATTENTION SHOULD BE PAID TO THE AIR/GAS RATIO TO ENSURE THE SYSTEM IS OPERATED AT THE LEANEST POINT THAT PROVIDES ACCEPTABLE PROCESS GAS.

IF THE GENERATOR IS EQUIPPED WITH AUTOMATIC DEW POINT CONTROL THE CONTROL OF THE DEW POINT CAN NOW BE RESET TO THE DESIRED RATIO AND CAN BE ADJUSTED ON THE TOUCH SCREEN AS THE PROCESS REQUIRES.

IT SHOULD BE POINTED OUT HERE THAT EVEN THOUGH THE DEW POINT MAY BE UNDER THE CONTROL OF AN AUTOMATIC DEW POINT CONTROL THE CONTROL SYSTEM IS **NOT** A SET-AND-FORGET SYSTEM. IT SHOULD BE CHECKED PERIODICALLY AS VARIATIONS IN FEED GAS COMPOSITION (DUE TO "SPIKING), SUPPLY PRESSURE, AMBIENT HUMIDITY AND OUTPUT PROCESS GAS FLOW WILL CONSPIRE TO CAUSE FLUCTUATION IN THE SYSTEM SETTINGS. THE AUTOMATIC CARBON CONTROL SHOULD DO 90% OF THE WORK BUT IT WILL REQUIRE OCCASIONAL ATTENTION AND OVERSIGHT. IT'S ALSO IMPORTANT TO UNDERSTAND THAT SYSTEM CORRECTIONS MADE BY THE AUTOMATIC CARBON CONTROL SYSTEM ARE VERY SLOW. IF THE SYSTEM SETTINGS ARE INTERRUPTED IT MAY TAKE THE CARBON CONTROL SYSTEM A HALF TO THREE QUARTERS OF AN HOUR TO READJUST OR RECOVER THE DESIRED SYSTEM SETTINGS.

THE GENERATOR IS EQUIPPED WITH AN AUDIBLE AS WELL AS VISUAL INDICATOR OF ALARM CONDITIONS.

WHEN AN ALARM CONDITION OCCURS THE AUDIBLE ALARM WILL ACTIVATE AND THE CORRESPONDING LIGHT WILL AP PEAR ON THE PANEL. PRESSING THE "ALARM SILENCE" BUTTON WILL TURN OFF THE AUDIBLE ALARM BUT THE ALARM LIGHT AND CIRCUIT WILL REMAIN ENERGIZED AS LONG AS THE ALARM CONDITION EXISTS. ALARM CONDITIONS WILL ALSO DISABLE OR SHUT DOWN VARIOUS GENERATOR FUNCTIONS.

PAGE REVISED 5-25-2010

17.0 If the generator is operated above its capacity the retort temperature will be lower resulting in carbon formation and high residuals in the process gas output. The best operating range is about 75% - 80% of rated capacity.

It is useful to note that, notwithstanding the nameplate capacity EN15E generator being 1500 CFH, the touch screen read-out is capable of showing a total gas flow of up to 2500 CFH. It is important to note that proper control of the gas ratio is only accurate up to the generator's design flow of 1500 CFH.

## OPERATION

1.0 ONCE THE START-UP PROCEDURE HAS BEEN COMPLETED, ALL MOISTURE HAS BEEN DRIVEN OUT OF THE CATALYST AND REFRACTORY AND THE CATALYST ACTIVATED, THE GENERATOR HEAT-UP RATE IS NOT CRITICAL AND THERE IS NO REQUIREMENT FOR A SOAK ON START-UP. HOWEVER, IF THE GENERATOR IS ALLOWED TO COOL TO AMBIENT TEMPERATURE AND NOT BE USED FOR A VERY LONG TIME MOISTURE ABSORPTION IN THE CATALYST AND INSULATION MAY RE-OCCUR.

IF THE GENERATOR OUTPUT IS NOT REQURED FOR A RELATIVELY SHORT PERIOD WE RECOMMEND IDLING AT A LOWER TEMPERATURE OF 1000°F RATHER THAN A COMPLETE SHUT DOWN (OBVIOUSLY, THE LOWER THE IDLE TEMPERATURE THE LONGER IT WILL TAKE TO RETURN TO OPERATING TEMPERATURE BUT ALSO THE LOWER THE TEMPERATURE THE LESS EXPENSIVE IT IS TO IDLE). THE ATMOSPHERE MIXER PUMP SHOULD BE TURNED OFF AND THE TEMPERATURE CONTROLLER SET TO THE IDLE SETTING. UPON RESTARTING, SET THE TEMPERATURE CONTROLLER TO 1900°F. RESTART THE PUMP WHEN APPROPRIATE. A TAG SHOULD BE PUT ON THE GENERATOR PANEL AS A REMINDER TO RESET THE ALARM TO 1700°F WHEN THE GENERATOR IS PUT BACK INTO SERVICE.

2.0 WHEN THE ATMOSPHERE PRODUCTION IS TO BE SHUT DOWN, CLOSE THE NATURAL GAS FLOW CONTROL VALVE AND WAIT UNTIL THE BURN-OFF STOPS BEFORE STOPPING THE PUMP. THIS WILL CLEAR THE RETORT OF EXPLOSIVE GAS AND PREVENT SOOTING. THE CLEARING PROCESS SHOULD TAKE ONLY 5 TO 10 MINUTES.

3.0 CONTINUOUS DEW POINT RECORDS ARE JUST AS IMPORTANT AS CONTINUOUS TEMPERATURE RECORDS. IT IS IMPORTANT TO MONITOR DEW POINT AT BOTH THE GENERATOR AND THE FURNACE. WITH FURNACE DEW POINT READINGS ONLY, THE GENERATOR MAY BE OVER-CONTROLLED WHILE TRYING TO EFFECT CHANGES IN FURNACE DEW POINT DUE TO FURNACE LEAKS. THE RESULTS CAN BE SOOTING CATALYST WHEN RUN TOO RICH OR DECOMPOSING CATALYST WHEN RUN TO LEAN.

4.0 CARBON DEPOSITS ARE ALMOST INEVITABLE IN ENDOTHERMIC GENERATORS. CARBON COLLECTS IN THE CATALYST BED SLOWLY AT LEAN AIR/GAS MIXTURES WHICH ARE PRODUCING NORMAL DEW POINTS AND RAPIDLY AT RICH AIR/GAS RATIOS. WHEN THE CARBON BUILD-UP STARTS TO EFFECT THE ENDOTHERMIC GAS BEING PRODUCED, A "CARBON BURN-OUT" IS REQUIRED.

THERE IS A DIFFERENTIAL PRESSURE GAGE INSTALLED ON THE UNIT TO MEASURE PRESSURE DROP ACROSS THE RETORT(S). IT IS USEFUL AND IMPORTANT TO NOTE THE PRESSURE READING WHEN THE UNIT IS FIRST STARTED. AS THE FLOW THROUGH THE RETORT BECOMES RESTRICTED BY CARBON DEPOSITS ON THE CATALYST, THIS PRESSURE READING WILL INCREASE. NOTE THE READING AT WHICH THE DEW POINT CONTROL DEGRADES OR THE PROCESS GAS FLOW IS NOT SUFFICIENT TO MEET DEMAND. THIS READING CAN BE USED IN THE FUTURE AS AN INDICATION OF THE NEED FOR A BURN OFF CYCLE.

AS A MATTER OF REFERENCE, THE PRESSURE DROP ACROSS "CLEAN" RETORTS AT FULL SYSTEM FLOW IS USUALLY LESS THAN 10" W.C. WITH TIME AND USE THAT PRESSURE DIFFERENTIAL WILL NORMALLY INCREASE. IF THE DIFFERENTIAL INCREASES TO SOMETHING ABOVE 20" W.C. (OR SIGNIFCANTLY HIGHER THAN THE INITIAL READING FOR YOUR SYSTEM) IT MAY BE AN INDICATION OF SOOTING AND MAY SUGGEST A BURN-OUT AS BEING DESIRABLE. THE EXPERIENCE OF A NUMBER OF OPERATING TDI SYSTEMS SUGGESTS A NORMAL DIFFERENTIAL PRESSURE OPERATING RANGE OF 5" W.C. TO 40" W.C. IT SHOULD BE NOTED THAT HIGHER SYSTEM FLOWS MAY PRODUCE HIGHER DIFFERENTIALS. IT SHOULD ALSO BE NOTED THAT THE NUMBERS NOTED HERE ARE ONLY FOR RELATIVITY. THE ACTUAL READINGS ON ANY GIVEN SYSTEM WILL BE UNIQUE TO THAT SYSTEM.

IF THE GENERATOR IS RUN ABOVE 40°F DEW POINT, IT MAY TAKE WEEKS BEFORE A CARBON BURNOUT IS NEEDED. IF IT IS RUN ABOVE 50°F DEW POINT IT MAY NEVER REQUIRE A CARBON BURNOUT. THE RATE OF CARBON BUILD-UP IS ALSO DIRECTLY AFFECTED BY THE VOLUME OF ENDOTHERMIC GAS BEING PRODUCED. A GENERATOR RUNNING AT FULL CAPACITY MAY REQUIRE A CARBON BURNOUT SOONER THAN ONE RUN AT REDUCED CAPACITY.

THE CARBON BURNOUT PROCEDURE IS DESCRIBED IN SECTION 6.

5.0 The catalyst is a nickel impregnated refractory ceramic. The ceramic can withstand temperatures above 2800°F; far beyond what the retort containing it can stand. However, if the temperature is high enough the ceramic will lose its bond and break down into powder in the presence of reducing gas. There are two conditions which can cause abnormally high temperatures in the catalyst bed:

5.1 Excesssively lean air/gas ratio:

Operating with an abnormally lean air/gas ratio, above 3:1 (or 8:1 for propane) can make the chemical reaction in the catalyst bed exothermic (releasing heat) instead of endothermic (requiring heat). Such a mixture is readily detected because it produces atmosphere with high dew point. The water condenses in the gas heat exchangers and piping to the furnace. If such a condition is of short duration little or no catalyst will be lost and the generator can be brought back to normal operation. If the condition lasts too long and a significant amount of catalyst is destroyed, it can be brought back to normal operation for only a short time before the dew point of the atmosphere begins to rise.

Occasionally a generator can be operated with decomposed catalyst by using an abnormally rich air/gas mixture. The atmosphere produced may have the desired dew point for a while but analysis would show a high level of unreacted hydrocarbons. In this case the dew point is not a reliable indication of the carbon potential of the atmosphere and in critical processes work spoilage might result.

5.2 Rapid carbon burn off:

Burning off carbon is an exothermic reaction, which produces a reducing gas and possibly high enough temperatures to destroy either or both retort and catalyst. Use the technique described in section 6.

6.0 Carbon burn off procedure.

CAUTION! The burnout of a sooted up retort can be a critical operation. It involves burning fuel (carbon) that has built up inside the retort and may produce very high temperatures. No part of the carbon burnout or burn off procedure should be unsupervised. It is possible to attain retort internal temperatures high enough to damage both the catalyst and/or the retort.

6.1 Shut off the gas flow to the furnace and redirect the generator output to the vent for burn off.

6.2 Press the burn-out icon on the touch screen. This will automatically reduce the chamber temperature to about 1500°F. The temperature interlock which prevents the pump from running unless the chamber temperature is above 1700° will automatically be bypassed. You must understand that even though the chamber temperature has been reduced a combustion process is going on inside the retort. It is important that the temperature inside the retort be kept under the chamber setpoint or about 1900°F.

6.3 When conditions allow, the generator will go into a five minute burn-out procedure. At the end of the procedure the operator will be given the option to repeat the burn-out routine or return to normal operation. The operator should watch the flame at the burn-off vent to determine the need for repeated burn-off cycles. The life of the catalyst may be reduced by the frequency of burn-out's.

6.4 After a complete carbon burnout, if $CH_4$ still accompanies high $CO_2$, or if you cannot get the dew point you need, the catalyst should be replaced.

6.5 Detailed trouble shooting procedures for the Dew Point Control system are given in the parts list and maintenance section of this manual.

# MAINTENANCE

All TDI generators are designed to be durable and long lived without a lot of care. There are, of course, instances in which some attention will be required and this section is to provide information for those routine maintenance issues.

1. CHANGING CATALYST: It is not necessary to remove the retort to change the catalyst. The base of the retort is removable so the retort can be emptied of its catalyst. This is a messy job and you will need to place a drop cloth under the retort and to have a couple of boxes that will fit under the retort to catch the spent catalyst.

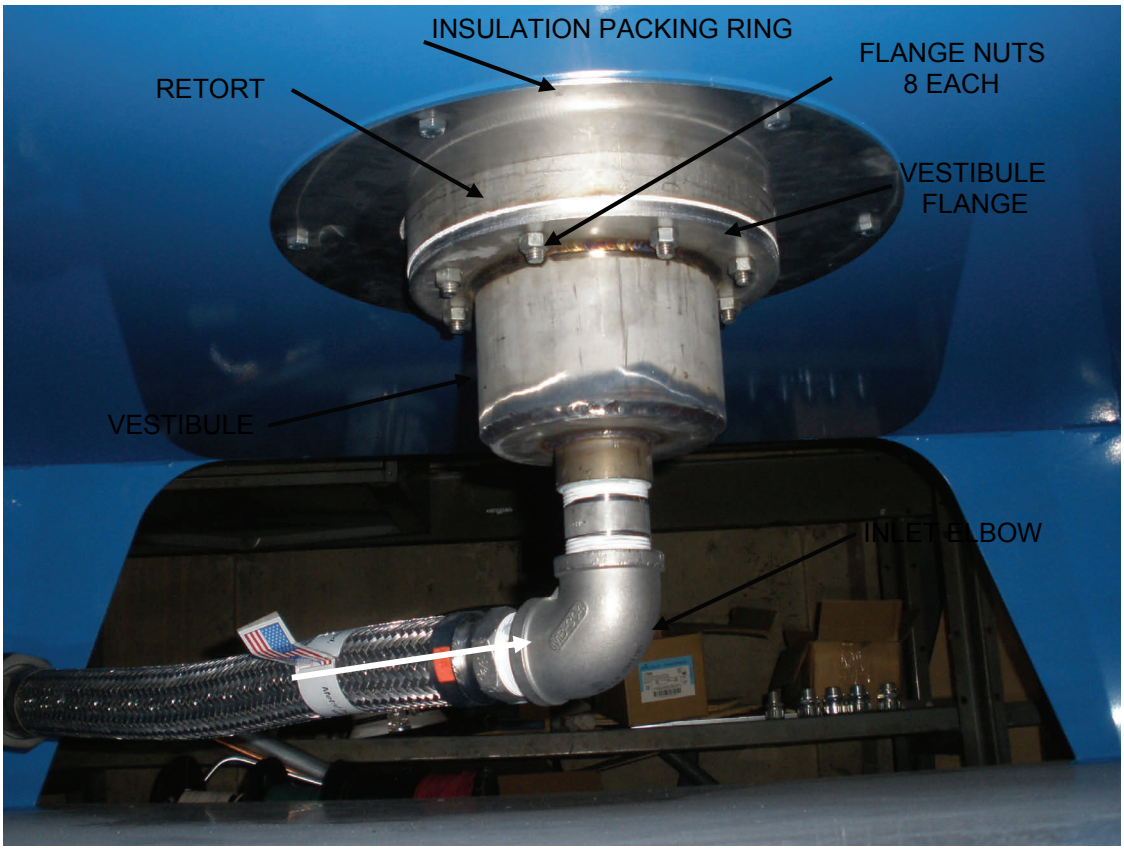


Remove all but two opposite flange nuts and set them aside. The vestibule flange is supporting all the catalyst in the retort and all that catalyst weighs about 60 lbs SO BE PREPARED TO BEAR THAT WEIGHT AS YOU REMOVE THE LAST TWO NUTS! It's a pretty good idea to support the vestibule between two bars held by couple of men on either side of the unit. As the vestibule is lowered the catalyst will drop out of the retort.

When you bolt the vestibule back up to the bottom of the retort it's recommended that a new flange gasket also be installed as a leak in this area is not a good thing.

Remove the flange at the top of the retort. Pour about 10 lbs (or two 2lb coffee cans full) of substrate (alundum) into the retort. This is to keep the nickel catalyst in the retort above the insulation so it stays in the hot section of the chamber where it is less likely to soot up (The insulation in the bottom of the chamber is 10" deep). Fill the rest of the retort with catalyst (it will take about 50 lbs of 3/4" cube type), install a new hitemp gasket and rebolt the flange.

You will have to activate the catalyst as in the initial startup instructions.

2. REPLACING A HEATING ELEMENT:

THE REPLACEMENT OF A HEATING ELEMENT IS VERY SIMPLE AND STRAIGHTFORWARD. THE MOST IMPORTANT THING (ASIDE FROM MAKING SURE ALL POWER IS DISCONNECTED) IS TO UNDERSTAND AND APPRECIATE THAT THE SILICON CARBIDE ELEMENTS USED IN THIS GENERATOR ARE VERY FRAGILE. THEY BREAK EASILY. WHEN YOU TAKE THEM OUT YOU MUST PULL THEM STRAIGHT UP. DO NOT BEND OR RATTLE THEM. IF YOU BANG THEM AGAINST THE SHELL THEY WILL PROBABLY BREAK. THEY'RE A BIT LIKE FLORESCENT LIGHT BULBS; IF YOU CAN GET THEM IN WITHOUT BREAKING THEY WILL LAST A VERY LONG TIME. ALSO UNDERSTAND THAT THESE ARE BAYONET TYPE ELEMENTS. THEY ARE NOT BOLTED OR FASTENED DOWN. THEY JUST SIT SUSPENDED FROM THE SHELL, HANGING IN THE CHAMBER.

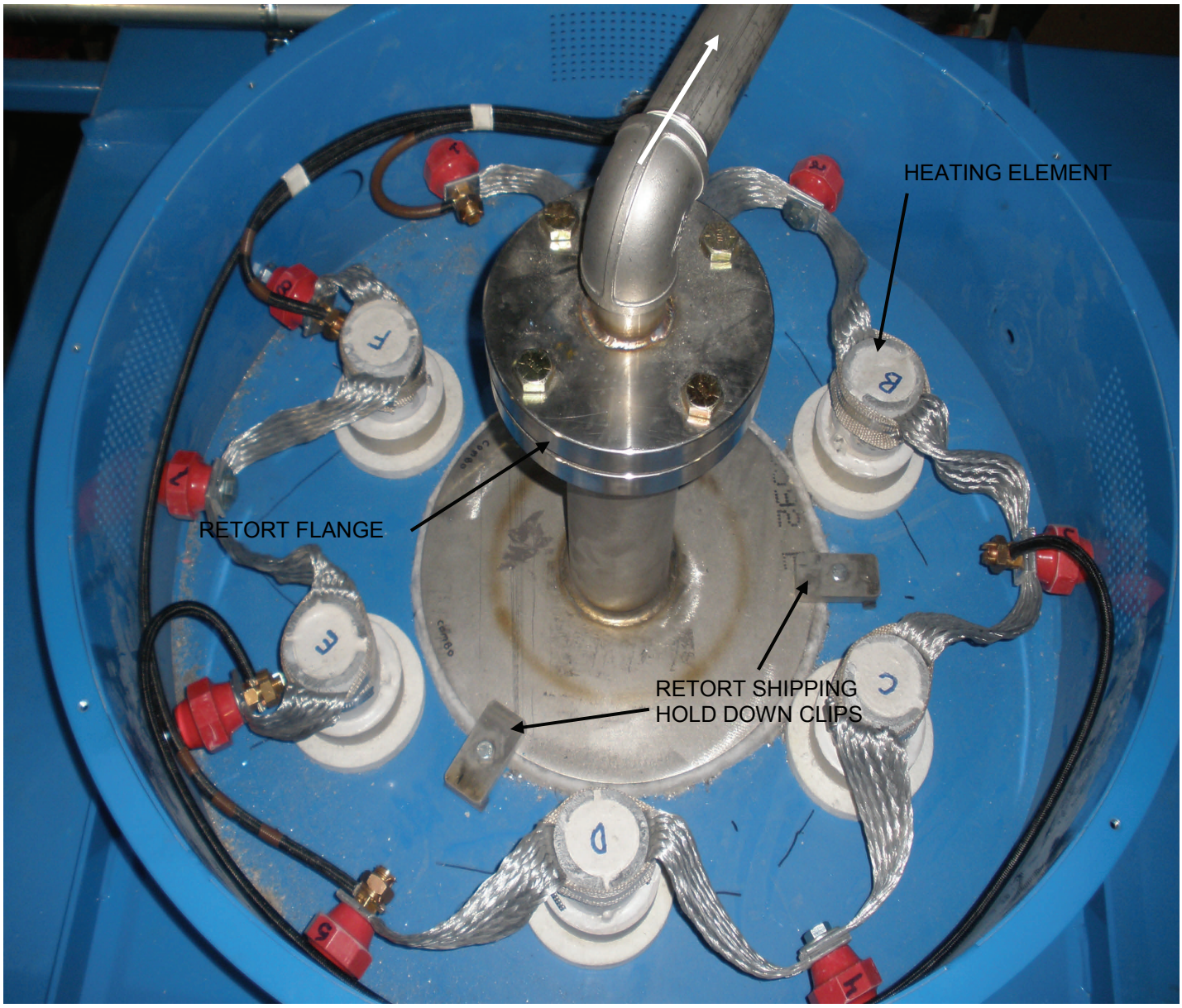


THE RETORT SHIPPING HOLD DOWN CLIPS ARE ONLY TO KEEP THE RETORT FROM SWINGING FREE DURING SHIPMENT.

IF IT BECOMES NECESSARY, THE RETORT MAY BE REMOVED FROM THE CHAMBER WITHOUT DISTURBING ANY OTHER COMPONENT. SIMPLY DISCONNECT THE TOP FLANGE AND BOTTOM INLET (EITHER AT THE VESTIBULE FLANGE OR THE INLET ELBOW), REMOVE THE HOLD DOWN CLIPS AND LIFT THE RETORT STRAIGHT UP. DO NOT LET IT SWING AS IT MAY STRIKE AND BREAK A HEATING ELEMENT. THE RETORT WEIGHS ABOUT 160 LBS EMPTY AND ABOUT 220 LBS FULL. WHEN REINSTALLING THE RETORT YOU MAY WANT TO REMOVE THE INSULATION PACKING RING. IF YOU DO REMOVE THE PACKING RING MAKE SURE YOU STUFF 10" OF INSULATION BACK IN AROUND THE RETORT AND REPLACE THE RING BEFORE YOU START THE SYSTEM UP AGAIN. THIS "RETORT STUFFING" AND THE PACKING RING ARE CRITICAL TO KEEPING HEAT IN THE CHAMBER.

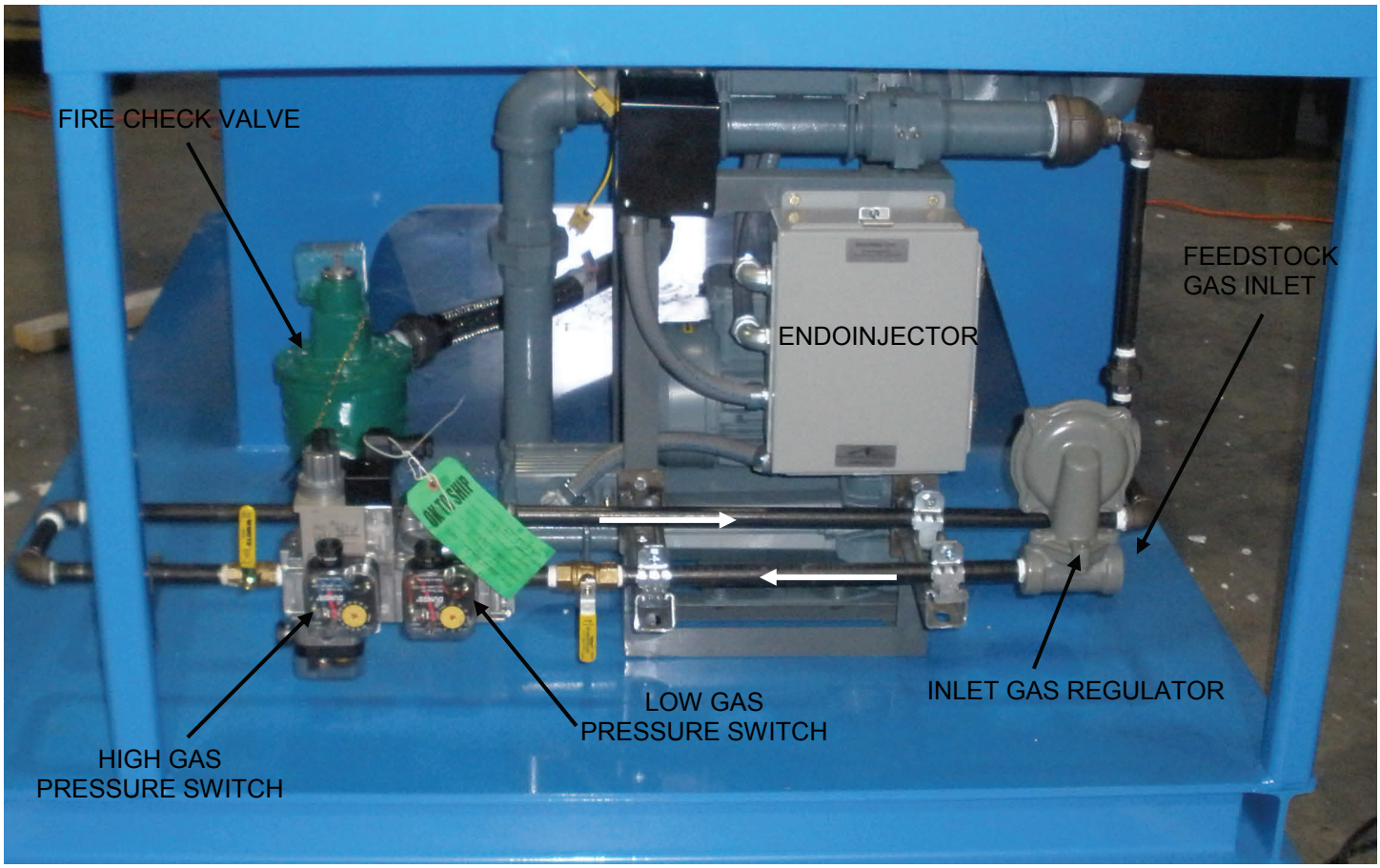
FIRE CHECK VALVE
ENDOINJECTOR
FEEDSTOCK
GAS INLET
INLET GAS REGULATOR
LOW GAS
PRESSURE SWITCH
HIGH GAS
PRESSURE SWITCH

# RECOMMENDED SPARES

## FOR THE
## THERMAL DYNAMIX EN15E
## ENDOTHERMIC GAS GENERATOR

| | |
|---|---|
| SILICON CARBIDE HEATING ELEMENTS, SEU 44X30X2.125 | 2 EACH |
| 7% NICKEL CATALYST, 3/4" CUBE, | 80 LBS |
| CATALYST SUBSTRATE (ALUNDUM), 1-1/4" | 5 LBS |
| RETORT BASE GASKET, TDI P/N 23-000-034-14 | 1 EACH |
| THERMOCOUPLE, TDI P/N 72-000-312 | 2 EACH |
| RETORT OUTLET FLANGE GASKET FLEXITALLIC 316L HITEMP, 3" | 1 EACH |

SPECIFICATIONS:
NOMINAL OUTPUT- 1500 CFH ENDOTHERMIC GAS
INPUT - 120 CFH PROPANE OF 2500 BTU/CF
VOLTAGE: 480/3/60 50 KW
INLET PRESSURE 10 TO 15 PSI
NORMAL OUTLET PRESSURE 1-3 PSI

EQUIPMENT AND CONTROLS BUILT TO LATEST
NFPA AND NATIONAL ELECTRICAL CODES

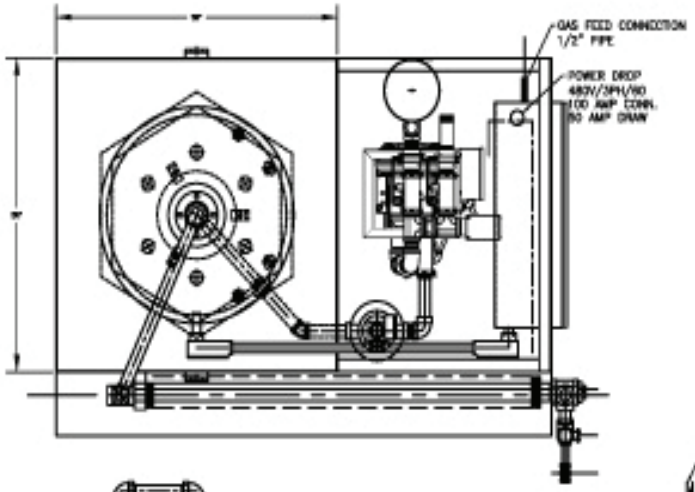


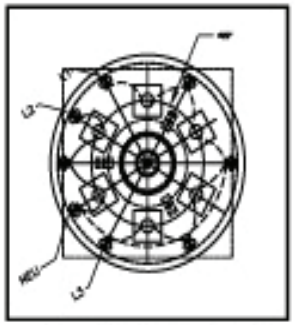


HEATING ELEMENT ARRANGEMENT

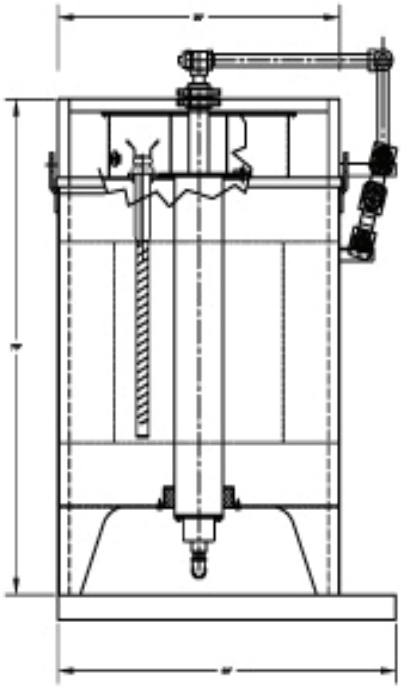

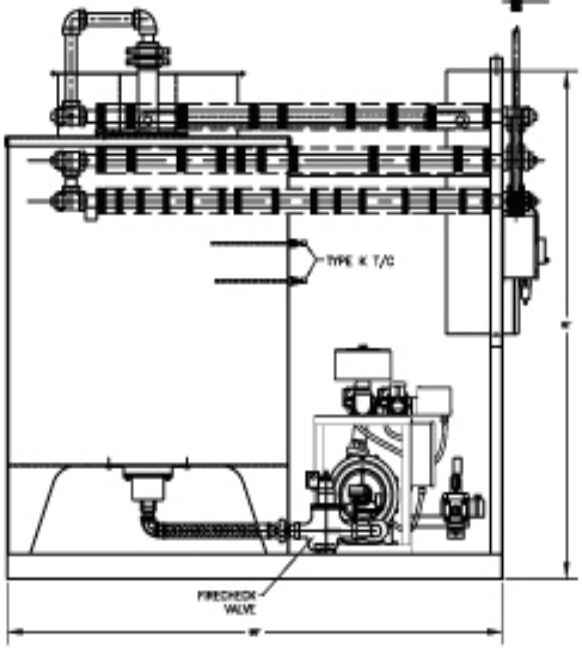


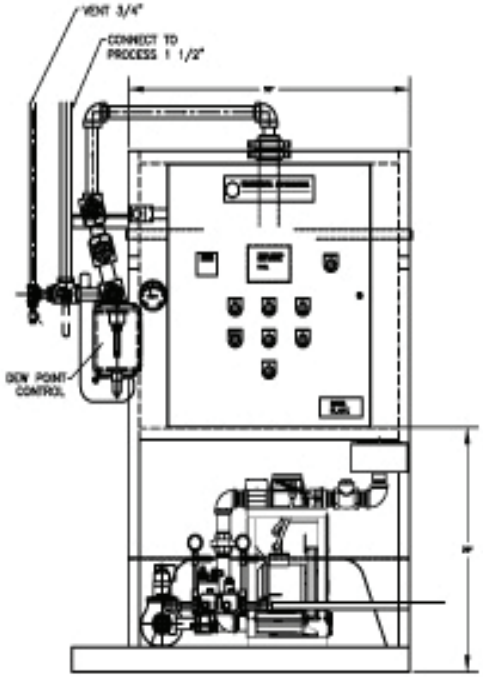


1500 CFH ELECTRIC ENDOTHERMIC ATMOSPHERE GENERATOR

DO NOT SCALE DRAWING
THIS PRINT IS LOANED, SUBJECT TO RETURN ON DEMAND AND UPON THE EXPRESS CONDITION THAT IT IS NOT USED DIRECTLY OR INDIRECTLY IN ANY WAY DETRIMENTAL TO OUR INTERESTS of THERMAL DYNAMIX, INC.

THERMAL DYNAMIX ATMOSPHERE & FURNACE SYSTEMS

09-118-01

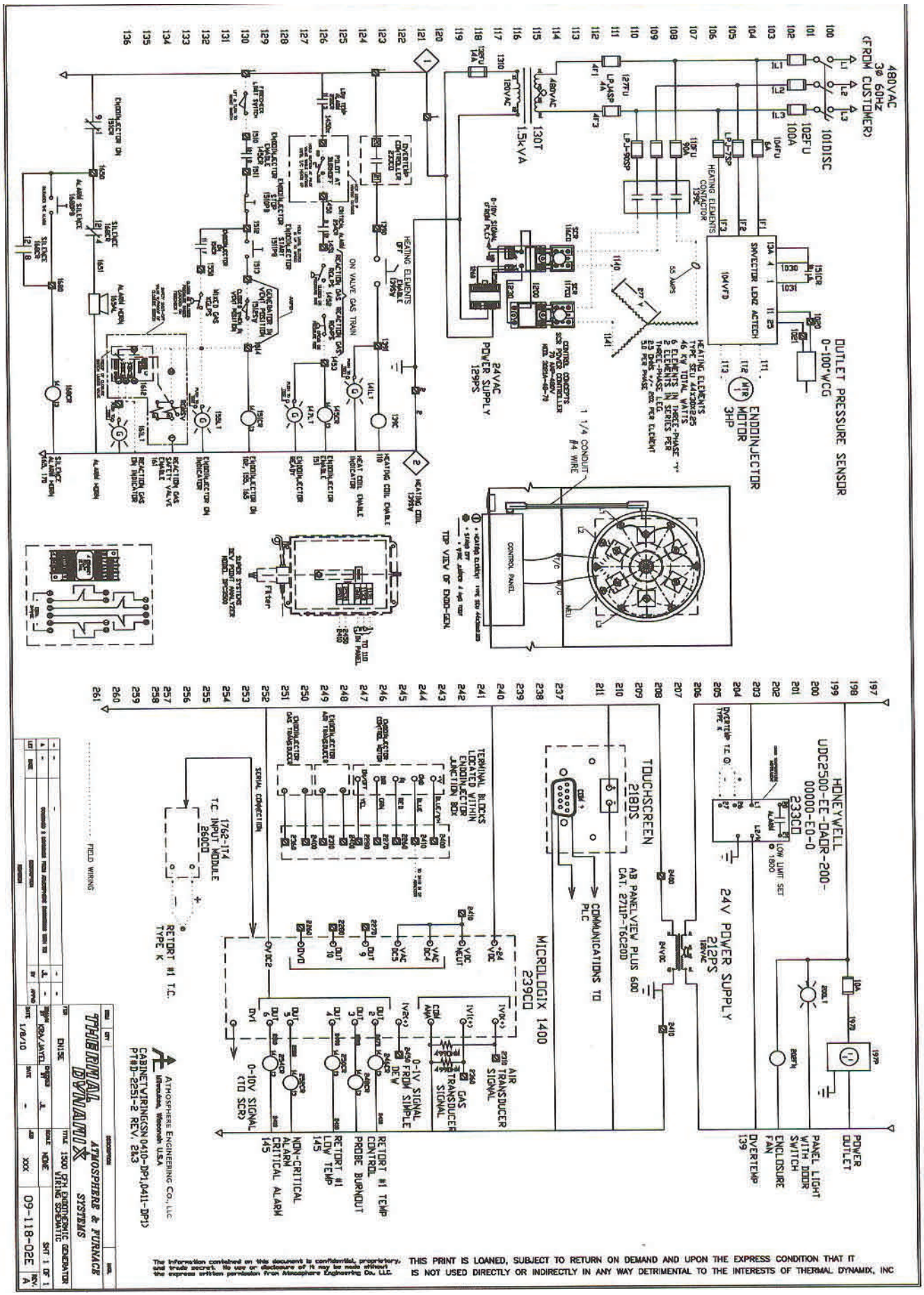
480VAC
3Ø 60HZ
(FROM CUSTOMER)
101DISC
102FU
100A
OUTLET PRESSURE SENSOR
0-100"WCG
ENDOINJECTOR
MOTOR
3HP
130T
1.5kVA
24VAC
POWER SUPPLY
129PS
1 1/4 CONDUIT
#4 WIRE
TOP VIEW OF ENDO-GEN
HONEYWELL
UDC2500-EE-DAOR-200-
00000-E0-0
233CD
24V POWER SUPPLY
212PS
TOUCHSCREEN
218DS
AB PANELVIEW PLUS 600
CAT. 2711P-T6C20D
COMMUNICATIONS TO
PLC
MICROLOGIX 1400
239CD
TERMINAL BLOCKS
LOCATED WITHIN
ENDOINJECTOR
JUNCTION BOX
1762-IT4
T.C. INPUT MODULE
260CD
RETORT #1 T.C.
TYPE K
SERIAL CONNECTION
FIELD WIRING
AIR
TRANSDUCER
SIGNAL
GAS
TRANSDUCER
SIGNAL
0-1V SIGNAL
FROM SIMPLE
DEW
0-10V SIGNAL
(TO SCR)
RETORT #1 TEMP
CONTROL
PROBE BURNOUT
RETORT #1
LOW TEMP
145
NON-CRITICAL
ALARM
CRITICAL ALARM
145
POWER
OUTLET
PANEL LIGHT
WITH DOOR
SWITCH
ENCLOSURE
FAN
OVERTEMP
139
ATMOSPHERE ENGINEERING CO., LLC
CABINETWIRINGSN0410-DP1,0411-DP1)
PT8D-2251-2 REV. 2&3
THERMAL DYNAMIX
ATMOSPHERE & FURNACE SYSTEMS
TITLE 1500 CFH ENDOTHERMIC GENERATOR
WIRING SCHEMATIC
SCALE NONE
SHT 1 OF 1
09-118-02E
REV. A
The information contained on this document is confidential, proprietary, and trade secret. No use or disclosure of it may be made without the express written permission from Atmosphere Engineering Co. LLC.
THIS PRINT IS LOANED, SUBJECT TO RETURN ON DEMAND AND UPON THE EXPRESS CONDITION THAT IT IS NOT USED DIRECTLY OR INDIRECTLY IN ANY WAY DETRIMENTAL TO THE INTERESTS OF THERMAL DYNAMIX, INC

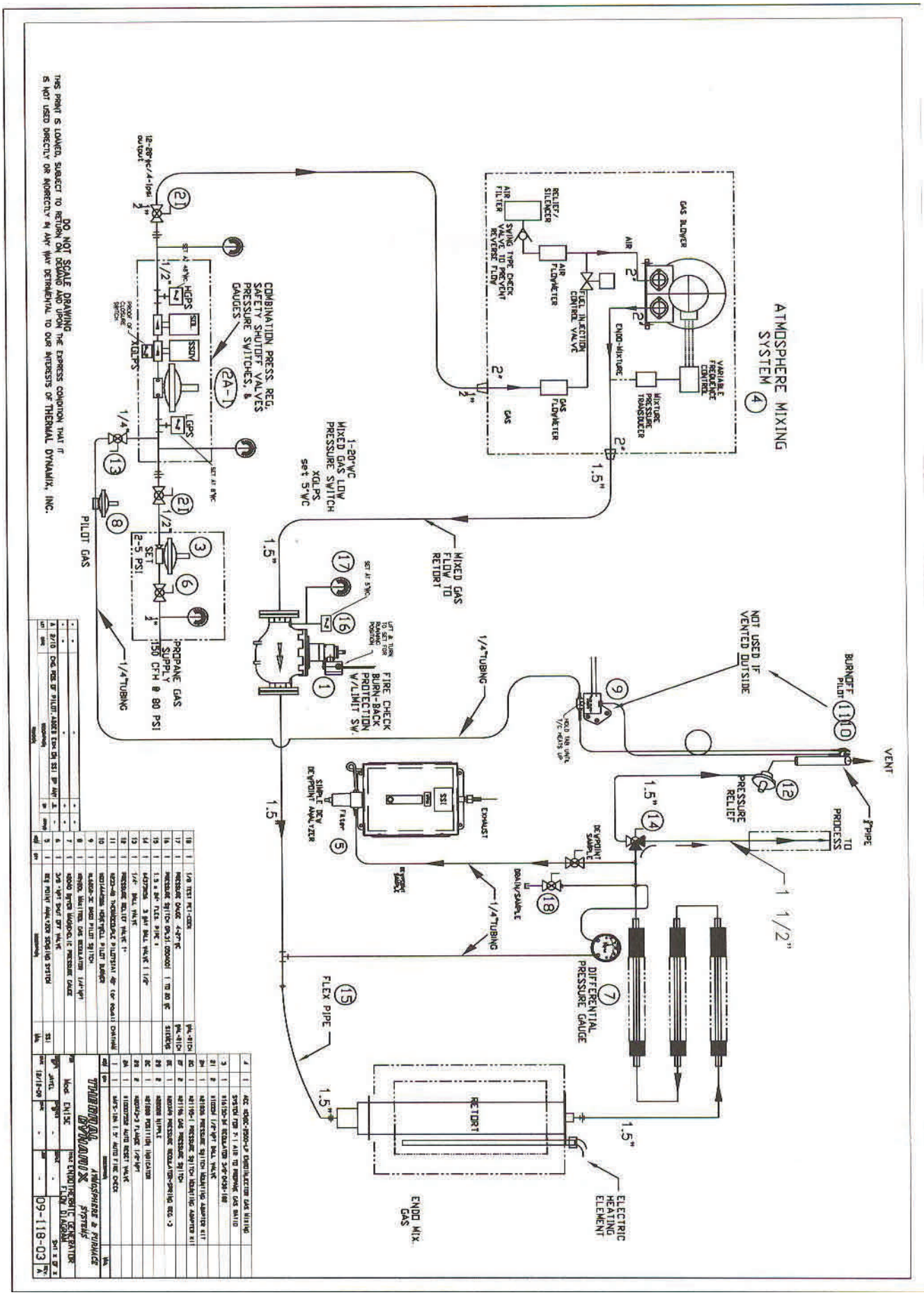
ATMOSPHERE MIXING SYSTEM
GAS BLOWER
VARIABLE FREQUENCE CONTROL
MIXTURE PRESSURE TRANSDUCER
AIR
ENDO-MIXTURE
GAS
AIR FLOWMETER
GAS FLOWMETER
FUEL INJECTION CONTROL VALVE
RELIEF/ SILENCER
AIR FILTER
SWING TYPE CHECK VALVE TO PREVENT REVERSE FLOW
COMBINATION PRESS. REG. SAFETY SHUTOFF VALVES PRESSURE SWITCHES, & GAUGES
HGPS
SSOV
LGPS
XGLPS
PROOF OF CLOSURE SWITCH
PILOT GAS
PROPANE GAS SUPPLY 150 CFH @ 80 PSI
1-20"WC MIXED GAS LOW PRESSURE SWITCH XGLPS set 5"WC
MIXED GAS FLOW TO RETORT
FIRE CHECK BURN-BACK PROTECTION W/LIMIT SW.
1/4"TUBING
NOT USED IF VENTED OUTSIDE
BURNOFF PILOT
VENT
PIPE TO PROCESS
PRESSURE RELIEF
DEWPOINT SAMPLE
DRAIN/SAMPLE
SIMPLE DEW POINT ANALYZER
EXHAUST
DIFFERENTIAL PRESSURE GAUGE
FLEX PIPE
RETORT
ENDO MIX. GAS
ELECTRIC HEATING ELEMENT
DO NOT SCALE DRAWING
THIS PRINT IS LOANED, SUBJECT TO RETURN ON DEMAND AND UPON THE EXPRESS CONDITION THAT IT IS NOT USED DIRECTLY OR INDIRECTLY IN ANY WAY DETRIMENTAL TO OUR INTERESTS OF THERMAL DYNAMIX, INC.
THERMAL DYNAMIX
ATMOSPHERE & FURNACE SYSTEMS
TRUE ENDOTHERMIC GENERATOR FLOW DIAGRAM
09-118-03

# Vendor Data

| | |
|---|---|
| **SCR power controller** | Control Concepts 3021A-48-70-4/20mA |
| **Mixer** | Atmosphere Engineering |
| **Dewpoint control** | SSI |
| **Fire check** | Selas AFS-12A |
| **Temperature control** | Atmosphere Engineering |
| **Over-temp control** | Honeywell UDC2500 |
| **Pressure Relief Valve** | Kunkle series 918 |