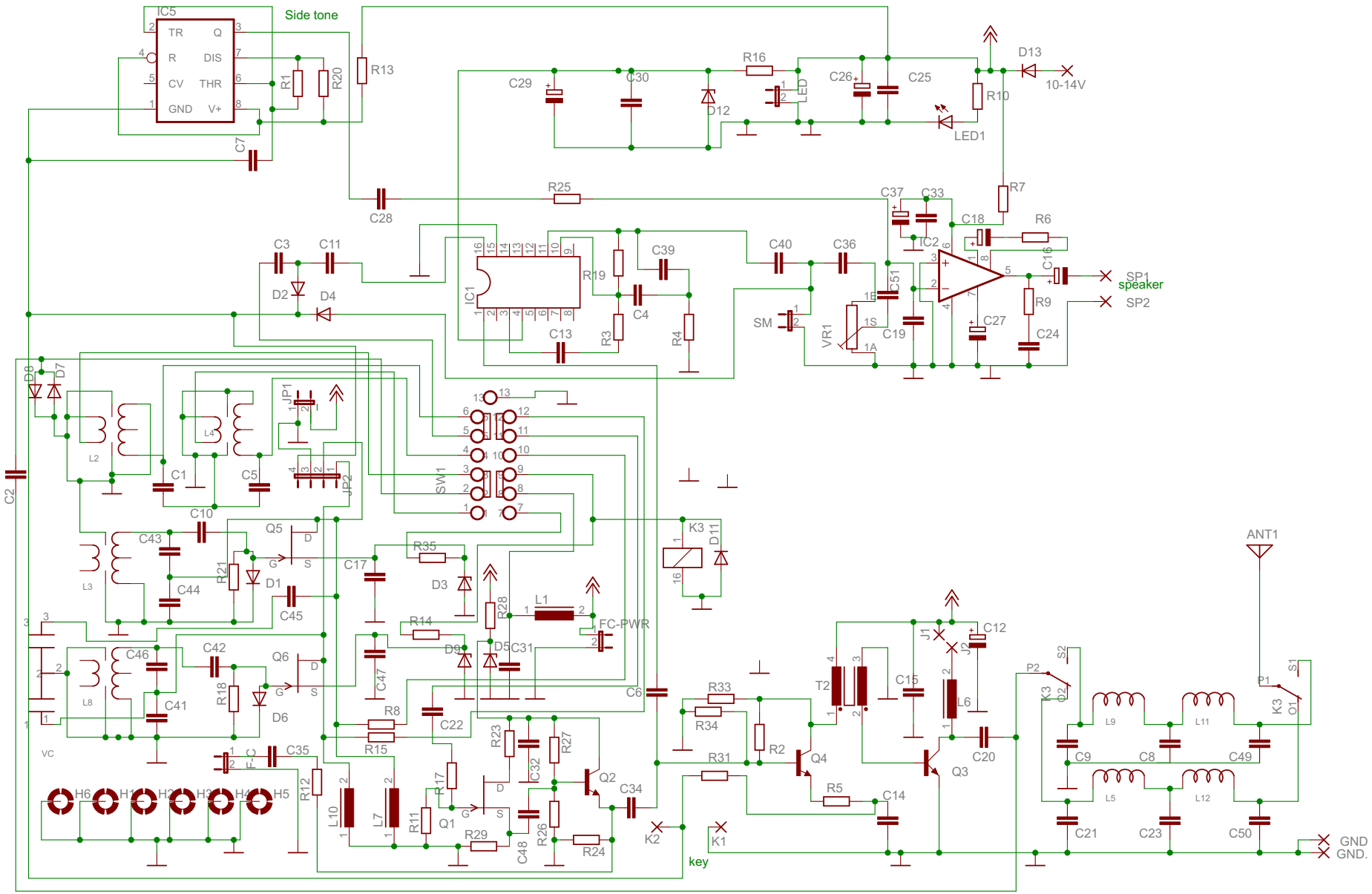
IC5
TR
Q
R
DIS
CV
THR
GND
V+
Side tone
R1
R20
R13
C7
C28
C29
C30
D12
R16
LED
C26
C25
D13
10-14V
R10
LED1
R7
R25
C37
C33
C18
R6
IC2
C16
SP1
speaker
SP2
R9
C24
C27
C51
C19
VR1
SM
C40
C36
C39
C4
R3
R4
R19
IC1
C13
C3
C11
D2
D4
D8
D7
L2
L4
JP1
JP2
C1
C5
C2
SW1
C10
C43
C44
L3
Q5
R21
D1
C45
C17
R35
D3
R28
L1
FC-PWR
R14
D9
D5
C31
C47
C46
C42
Q6
R18
D6
C41
L8
VC
C35
R8
R15
C22
R23
C32
R27
Q2
C34
R12
L10
L7
R11
Q1
R17
R29
C48
R26
R24
H6
H1
H2
H3
H4
H5
K3
D11
C6
R33
R34
R31
R2
Q4
R5
C14
K2
K1
key
J1
J2
C12
T2
C15
L6
Q3
C20
ANT1
P2
S2
K3
Q2
P1
S1
K3
Q1
L9
L11
L5
L12
C9
C8
C49
C21
C23
C50
GND
GND.