MEADE CONCRETE COMPANY LLC

W10440 Cty Rd K, P.O. Box 167 Lodi, WI 53555
(608) 592-3803 FAX (608) 592-3804
info@meadeconcrete.com

1300 GALLON GREASE TANK

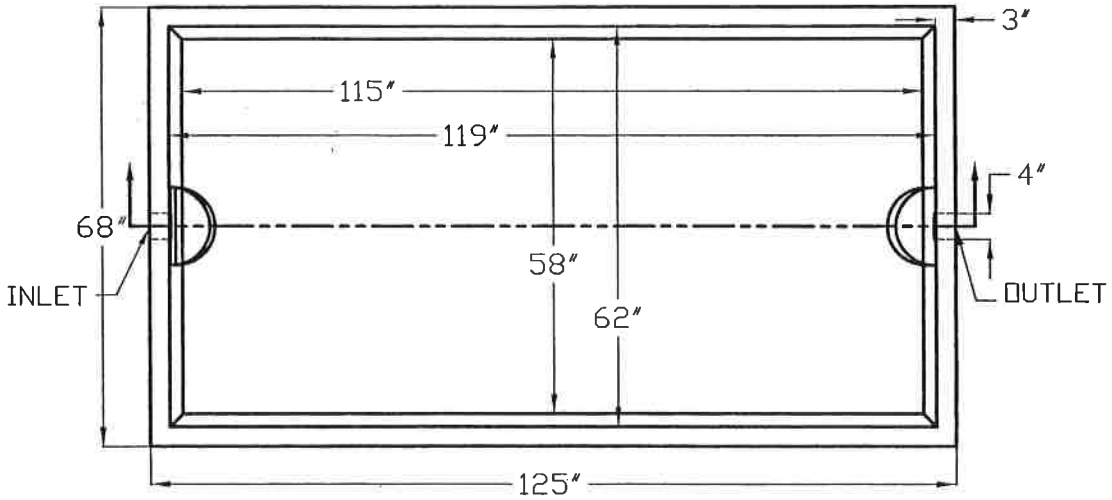

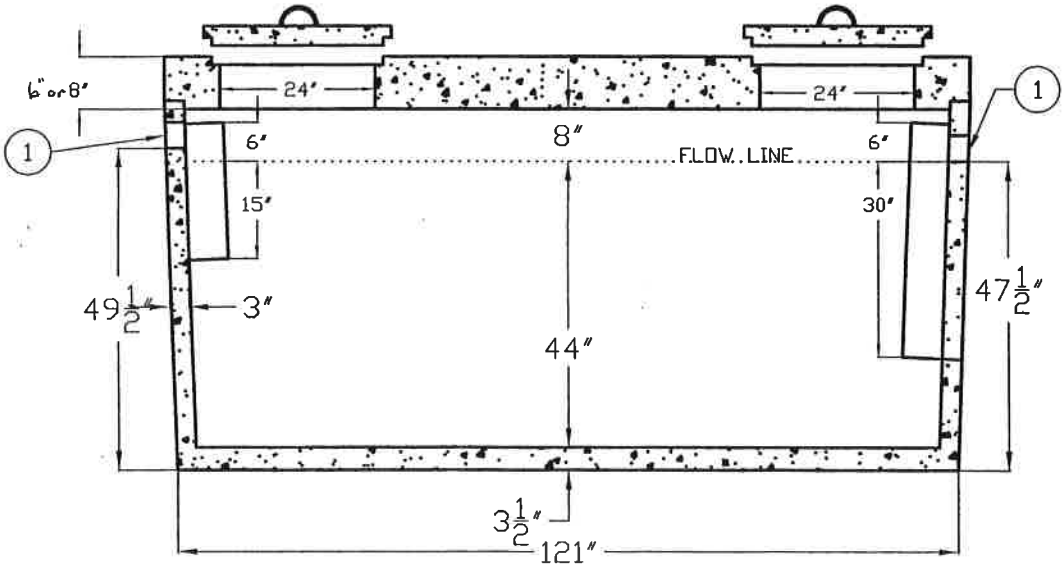

Note:

1) 4" press-seal gasket on inlet and outlet.