Central filter lubricator unit| --

Image shows:
9.2455.00.000

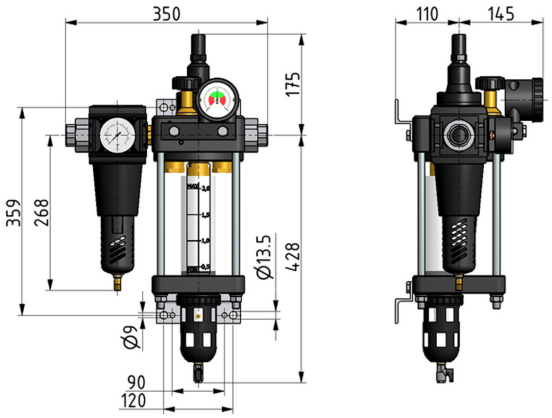

Image shows:
9.2455.00.000

flow characteristic

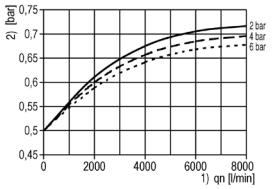

oil mist activation

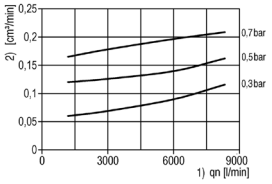

symbol

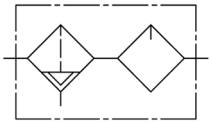

technical data

description: differential pressure regulated central-lubricator
supply pressure P1 max.: 10 bar
temperature range: -10°C - +60°C
mounting: vertical, drain down
fixing: install in pipe line, mounting bracket
operating differential pressure area: 0,3 - 1 bar
recommendated operating differential pressure area: 0,5 bar
bowl volume: 2 l
flow range: 80 - 7000 l/min
recommendated oil viscosity: 32 c St / 40°C
kind of oil: CL 32 DIN 51517 - ISO VG 32
grade of filtration of prefilter: 40 µm (absolutely)
oil miost particle size: 0,3 - 2 µm

accessories

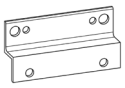

mounting bracket: ZFL.55-22

fine filter silencer: FSD.33 + FSD.34 + FSD.55

type	part-number	description
ZFL.55	9.2455.00.000	Central filter lubricator unit G1