BASIC STOP-START LAYOUT FOR A CAR WASH APPLICATION

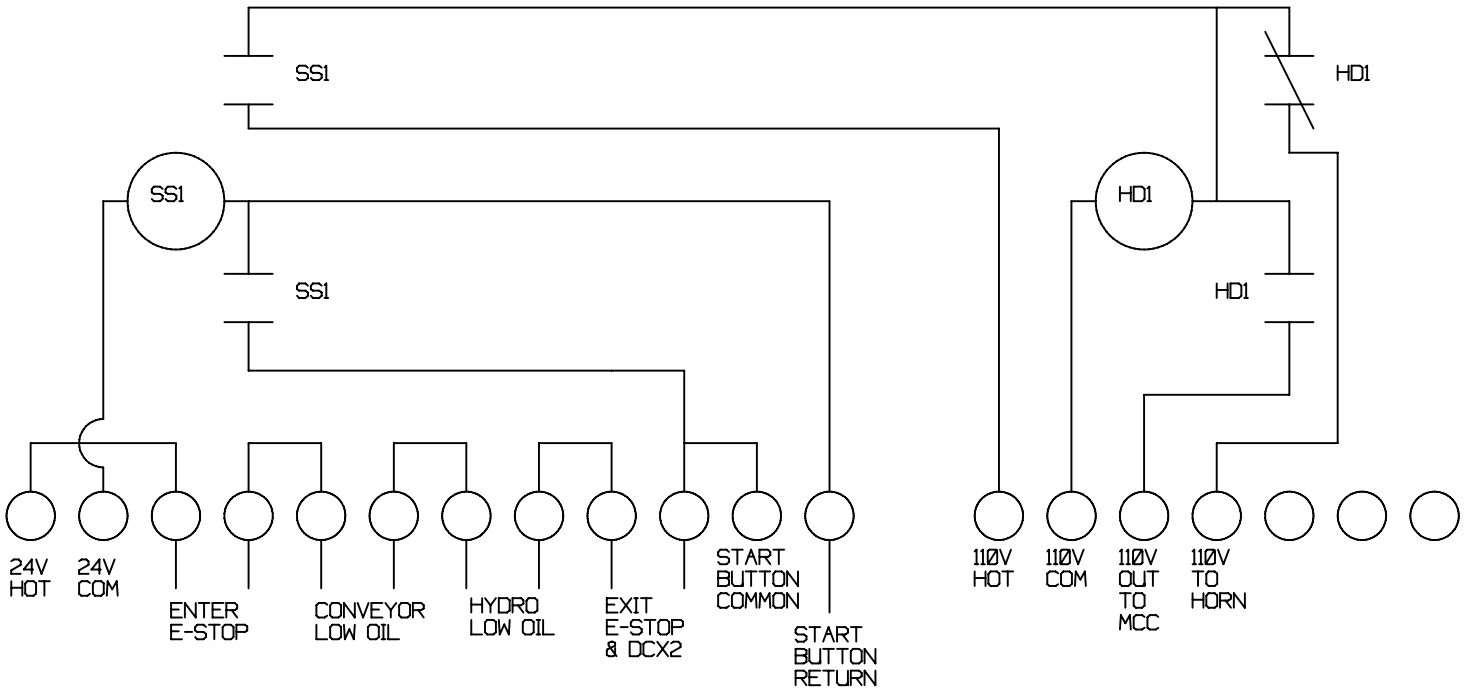

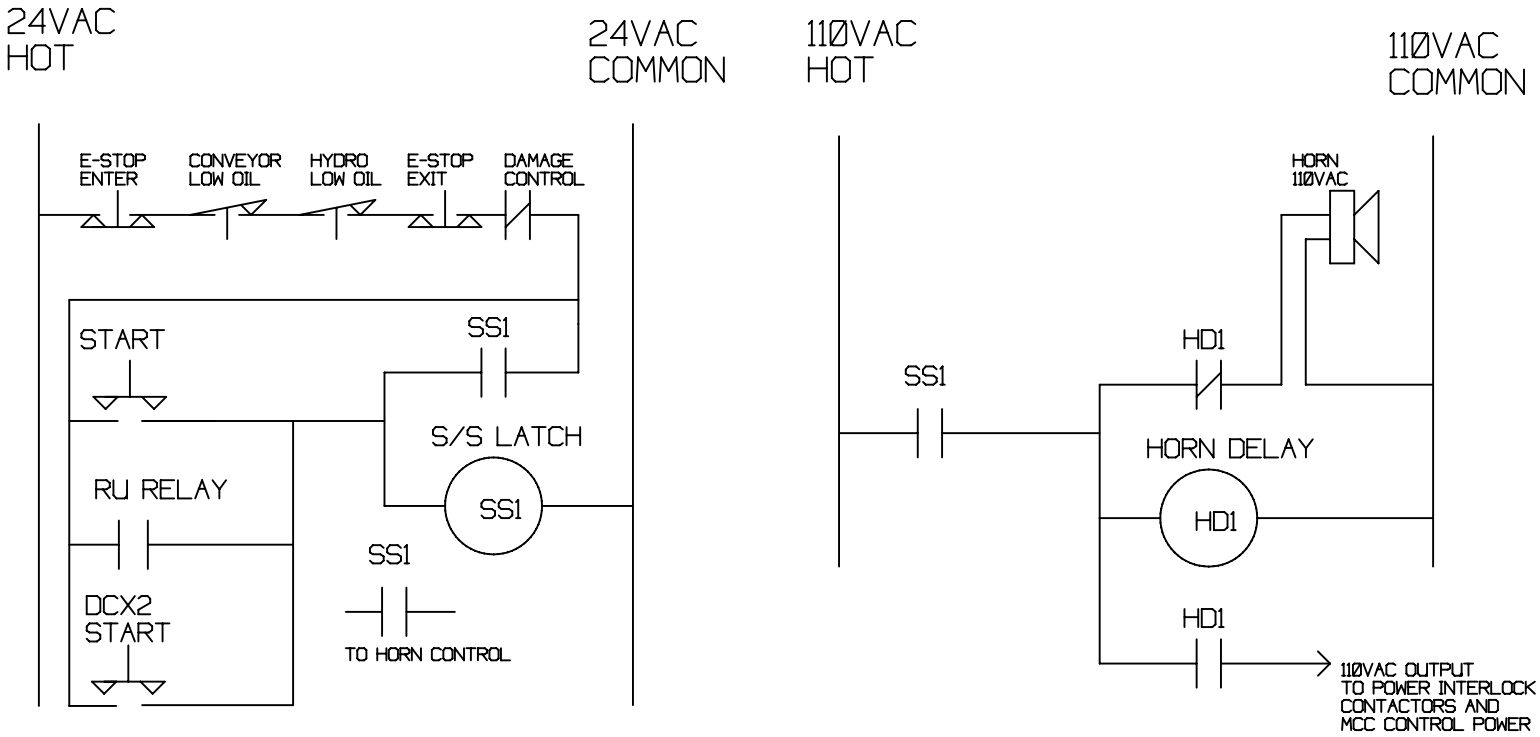

SS1 = Standard Control Relay DPDT Coil should reflect power supplied (24vac shown)

HD1 = Standard Time Delay On Type. Shown here as 110vac type with 110vac horn

Locations vary on number of Stops/Starts and other safety switches.

Shown here is just a generic representation.