OILMAN

Global Reliable Supplier

OILMAN GROUP LTD

Represents BOMCO

MUD PUMP

February, 2018

Pumps We can Supply

Global Reliable Supplier

Based on the technology for F-500/800/1000 mud pumps from EMSCO, BOMCO has designed and manufactured F-1300 /1600/1600HL, F-2200/2200HL, QDP-2200 and QDP-3000 mud pumps. The mud pump packages can be equipped with DC/AC motors or diesel engines in various transmission types.

www.oilmangroup.com

Global Reliable Supplier

Specifications

	Type	Triplex Single Acting Piston Pump		
		F-500	F-800	F-1000
1	Max. Bore X Stroke Length	6-3/4” x 7-1/2”	6-3/4 “x 9”	6-3/4” x10”
2	Strokes Rating	160spm	150spm	140spm
3	Rated Power	500HP	800HP	1000HP
4	Gear type	Herringbone gear	Herringbone gear	Herringbone gear
5	Gear Ratio	4.286:1	4.185:1	4.207:1
6	Lubrication	Pressure and Splash	Pressure and Splash	Pressure and Splash
7	Suction Inlet	Flange	Flange	Flange
8	Discharge Outlet	4" Flange, 5000Psi	5" Flange, 5000Psi	5" Flange, 5000Psi
9	OD of Pinion Shaft	5-1/2”	7”	7-3/4”
10	Keys	1-1/4” x 1-1/4”	1-3/ 4”x 1-3/4”	2”x2”
11	Valve Pots	API 5#, Valve-over-valve	API 6#, Valve-over-valve	API 6#, Valve-over-valve
12	Weight	About 9.77 ton	About 14.5 ton	About 18.8 ton

F-500/800/1000 Mud Pump

www.oilmangroup.com

OILMAN

Global Reliable Supplier

F-500 Performance Data

Strokes per Minute	Rated Power kW (HP)	Liner Size (in) and Pressure Rating (MPa)						
		6-3/4	6-1/2	6	5-1/2	5	4-1/2	4
		9.25	9.97	11.7	13.93	19.85	20.81	26.33
		Displacement (L/s)						
170	384 (515)	37.38	34.67	29.54	24.82	20.51	16.61	13.13
165*	373 (500)	36.28	33.65	28.67	24.09	19.91	16.13	12.74
150	339 (455)	32.99	30.59	26.06	21.90	18.10	14.66	11.58
140	316 (424)	30.79	28.55	24.32	20.44	16.89	13.68	10.81
130	294 (394)	28.59	26.51	22.59	18.98	15.69	12.71	10.04
120	271 (364)	26.39	24.47	20.85	17.52	14.48	11.73	9.27
110	249 (333)	24.19	22.43	19.11	16.06	13.27	10.75	8.49
1		0.220	0.204	0.174	0.146	0.121	0.977	0.13

Notes:

i. Based on 100% volumetric efficiency and 90% mechanical efficiency.

ii. *Recommended speed and input power for continuous service.

OILMAN

Global Reliable Supplier

F-800 Performance Data

Strokes per Minute	Rated Power kW (HP)	Liner Size (in) and Pressure Rating (MPa)						
		6-3/4	6-1/2	6	5-1/2	5	4-1/2	4
		13.56	14.63	17.16	20.43	24.72	30.51	35
		Displacement (L/sec)						
160	636 (853)	42.22	39.15	33.36	28.03	23.17	18.76	14.83
150*	596 (800)	39.58	36.70	31.27	26.28	21.72	17.59	13.90
140	557(747)	36.94	34.26	29.19	24.53	20.27	16.42	12.97
130	517 (693)	34.30	31.81	27.10	22.78	18.82	15.25	12.05
120	477 (640)	31.67	29.36	25.02	21.02	17.37	14.07	11.12
110	437 (587)	29.03	26.92	22.93	19.27	15.93	12.92	10.19
1		0.263	0.244	0.208	0.175	0.144	0.117	0.092

Notes:

1. Based on 100% volumetric efficiency and 90% mechanical efficiency.
2. *Recommended speed and input power for continuous service.

OILMAN

Global Reliable Supplier

F-1000 Performance Data

Strokes per Minute	Rated Power kW (HP)	Liner Size (in) and Pressure Rating (MPa)						
		6-3/4	6-1/2	6-1/4	6	5-1/2	5	4-1/2
		16.4	17.6	19.1	20.9	24.6	29.8	35.0
		Displacement (L/sec)						
150	788 (1072)	43.9	40.7	37.6	34.7	29.0	24.0	19.4
140*	735 (1000)	41.0	38.0	35.2	32.4	27.2	22.5	18.2
130	683 (929)	37.7	35.1	32.5	29.9	24.7	20.8	16.9
120	630 (857)	34.8	32.4	30.0	27.6	22.8	19.2	15.6
110	578 (786)	31.9	29.7	27.5	25.3	20.9	17.6	14.3
100	525 (714)	29.0	26.9	25.0	22.9	19.0	15.9	13.0
1		0.29	0.27	0.25	0.23	0.19	0.16	0.13

Notes:

1. Based on 100% volumetric efficiency and 90% mechanical efficiency.
2. *Recommended speed and input power for continuous service.

Global Reliable Supplier

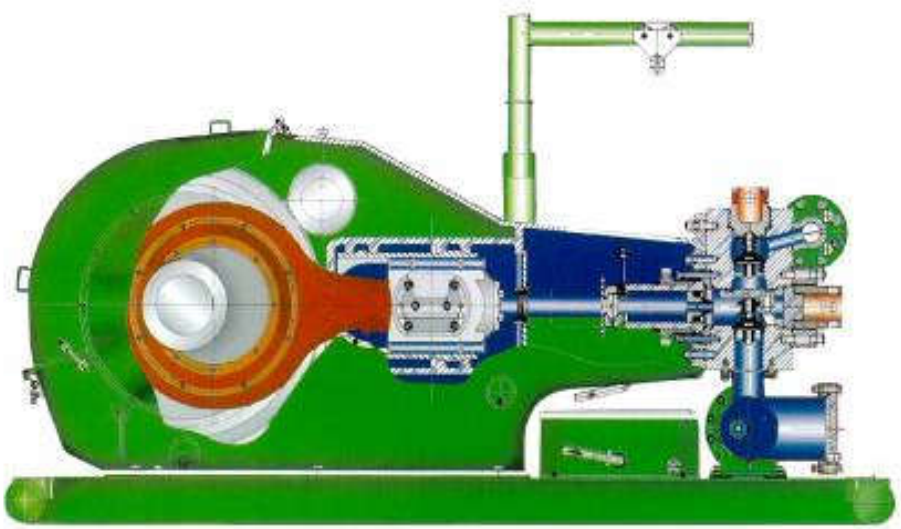

F-1300/1600 Mud Pump

Specifications

	Type	Triplex Single Acting Piston	
1	Max. Bore X Stroke Length	7”x12”	
2	Speed Rating	120spm	
3	Rated Power	1300HP	1600HP
4	Gear type	Herringbone gear	
5	Gear Ratio	4.206:1	
6	Lubrication	Pressure and Splash	
7	Suction Inlet	12 “ Flange	
8	Discharge Outlet	5“ Flange, 5000Psi,	
9	OD of Pinion Shaft	8 ½”	
10	Keys	50.8” x 50.8”	
11	Valve Pots	Valve-over-valve, API 7#	

OILMAN

Global Reliable Supplier

F-1300 Performance Data

Strokes per Minute	Rated Power (Kw)	Liner Size (in)						
		7	6-3/4	6-1/2	6-1/4	5	5-1/2	5
		Pressure Rating MPa (psi)						
		19.2 (2785)	20.7 (2995)	22.3 (3230)	24.1 (3495)	26.2 (3795)	31.1 (4515)	34.5 (5000)
		Displacement (L/S)						
120	969	45.40	42.22	39.15	33.36	30.64	28.03	23.00
110	888	41.62	38.70	35.89	30.58	28.08	25.70	21.24
100	808	37.84	35.18	32.63	27.80	25.53	23.36	19.31
90	727	34.05	31.66	29.36	25.02	22.98	21.02	17.37

Notes:

1. Based on 100% volumetric efficiency and 90% mechanical efficiency.
2. *Recommended speed and input power for continuous service.

Global Reliable Supplier

F-1600 Performance Data

Strokes per Minute	Rated Power (Kw)	Liner Size (in)						
		7	6-3/4	6-1/2	6	5-3/4	5-1/2	5
		Pressure Rating MPa (psi)						
		23.4 (3343)	25.1 (3585)	27.1 (3871)	31.8 (4542)	34.6 (4943)	35 (5000)	35.0 (5000)
		Displacement (L/S)						
120	1180	45.40	42.22	39.15	33.36	30.64	28.03	23.00
110	1082	41.62	38.70	35.89	30.58	28.08	25.70	21.24
100	983	37.84	35.18	32.63	27.80	25.53	23.36	19.31
90	885	34.05	31.66	29.36	25.02	22.98	21.02	17.37

Notes:

1. Based on 100% volumetric efficiency and 90% mechanical efficiency.
2. *Recommended speed and input power for continuous service.

Global Reliable Supplier

HIGH-PRESSURE MUD PUMP (7500PSI,52MPa)

-F-1600HL MUD PUMP
-F-2200HL MUD PUMP
-QDP-2200 MUD PUMP
-QDP-3000 MUD PUMP

www.oilmangroup.com

Global Reliable Supplier

Specifications

Model	Triplex Single Acting Piston
Power Rating (kW)	1180
Strokes Rating (min^{-1})	120
Stroke (mm)	304.8
Gear Type	Herringbone
Gear Ratio	4.206： 1
Suction Inlet (mm)	12”
Discharge Outlet (mm)	Flange 5-1/8”(70MPa)
Pinion Shaft Dia. (mm)	215.9
Valve Dia. (mm)	API-7#
Outline Dia. (mm)	5475 × 2964 × 3087
Apprx. Weight (Kg)	29535

F-1600HL Mud Pump

www.oilmangroup.com

Global Reliable Supplier

F-1600HL Performance Data

Liner Size (in)		7-1/2	7	6-3/4	6-1/2	6	*5-1/2	*5	*4-3/4
Pressure (MPa)		20.7	23.0	25.8	29.2	33.2	38.1	44.2	51.9
Stroke Min-1	Power (kW)	Displacement (l/s)							
130	1275	56.17	50.42	44.97	39.83	35.01	30.50	26.31	22.42
*120	1176	51.85	46.54	41.51	36.77	32.32	28.15	24.27	20.68
110	1078	47.52	42.66	38.05	33.71	29.62	25.81	22.26	18.97
100	980	43.20	38.78	34.59	30.64	26.93	23.46	20.24	17.25
90	882	38.88	34.90	31.13	27.58	24.24	21.11	18.21	15.52
80	784	34.56	31.02	27.67	24.51	21.54	18.77	16.19	13.80
1		0.43208	0.3878	0.3459	0.3064	0.2693	0.2346	0.2024	0.1725

Notes:

1. Based on 100% volumetric efficiency and 90% mechanical efficiency.
2. *Recommended speed and input power for continuous service.

Global Reliable Supplier

Type	Triplex Single acting plunger piston
Rated Power(kW)	1640
Stroke Rating(min^{-1})	105 rpm
Stroke Length(mm)	356
Gear Type	Herringbone Gear
Gear Ratio	4.5122： 1
Suction flange	12”
Discharge flange	5-1/8” (70MPa)
Pinion shaft Dia. (inch)	10
Key Size(in)	2 1/2x1 3/4
Valve	API-8#
Approx. Weight (Kg)	43080

F-2200HL Mud Pump

www.oilmangroup.com

OILMAN

Global Reliable Supplier

F-2200HL Performance Data

Stroke	Rated Power		Liner Size(in) and Rated Pressurer(Mpa,psi)														
			9	8-3/4	8-1/2	8-1/4	8	7-3/4	7-1/2	7-1/4	7	6-3/4	6-1/2	6-1/4	6	5-1/2	5
			19.2	20.4	21.6	22,9	24.4	26.0	27.7	29.7	31.8	34.2	36.9	39.9	43.3	51.5	51.7
			2790	2955	3130	3320	3535	3765	4020	4300	4615	4865	5350	5790	6280	7475	7500
rpm	kW	hp	Displacement L/S（GPM）														
*105	*1640	*2200	76.71 1216	72.51 1149	68.42 1085	64.46 1022	60.61 961	56.88 902	53.27 844	49.78 789	46.40 736	43.15 684	40.01 634	36.99 586	34.09 540	28.65 454	23.68 375
90	1406	1886	65.75 1042	62.15 985	58.65 930	52.25 876	51.95 823	48.76 443	45.66 724	42.67 676	39.78 630	36.99 586	34.30 544	31.71 503	29.22 463	24.56 389	20,29 322
80	1250	1676	58.45 926	55.24 876	52.13 826	49.11 778	46.18 732	43.34 687	40.59 643	37.96 601	35.36 560	32.88 521	30.49 483	28.19 447	25.98 412	21.83 346	18.04 286
70	1094	1467	51.14 811	48.34 766	45.62 723	42.97 681	40.41 640	39.92 601	35.51 563	33.19 526	30.94 490	28.77 456	26.67 423	24.66 391	22.73 360	19.10 303	15.78 250
60	937	1257	43.83 695	41.43 657	39.10 620	36.83 584	34.63 549	32.50 515	30.44 482	28.44 451	26.52 420	24.66 391	22.86 362	21.14 335	19.48 309	16.37 259	13.53 214
50	781	1048	36.53 579	34.53 547	32.58 516	30.69 487	28.86 457	27.09 429	25.37 402	23.70 376	22.10 350	20.55 326	19.05 302	17.62 279	16.23 257	13.64 216	11.27 179
1			0.7306 11.580	0.6905 10.945	0.6517 10.329	0.6139 9.730	0.5772 9.149	0.5417 8.587	0.5073 8.042	0.4741 7.514	0.4420 7.005	0.4109 6.514	0.3811 6.040	0.3523 5.584	0.3247 5.147	0.2728 4.325	0.2255 3.574

Notes:

1. Based on 100% volumetric efficiency and 90% mechanical efficiency.
2. *Recommended speed and input power for continuous service.

Global Reliable Supplier

QDP-2200 Mud Pump

www.oilmangroup.com

Global Reliable Supplier

Type	QDP-3000					
Rated Power(kW)	2237					
Stroke Rating(min^{-1})	117 rpm					
Stroke Length(mm)	300					
Liner Size(mm)	130	140	150	160	170	180
Max Stroke(min^{-1})	166	154	144	135	127	120
Max Pressure(Mpa)	51.9	44.7	39.0	34.2	30.3	27. 0
Max Dispplacement(L/s)	55.08	59.27	63.62	67.86	72.07	76. 34
Rated Piston Rod Load(N)	688,388					
Suction flange	12”					
Discharge flange	5-1/8” (70MPa)					
Approx. Weight (Kg)	41018					

QDP-3000 Mud Pump

www.oilmangroup.com

Global Reliable Supplier

Spare Parts

Oilman Group offers a fully line of fluid end modules and accessories for triplex mud pumps. Fluid ends and components are interchangeable to Emsco's mud pump.

Fluid End 5000psi or 7500psi

www.oilmangroup.com

Global Reliable Supplier

Spare Parts

All kind of pistons made of different material to meet different requirement.

Bi-metal liner & Zirconia Ceramic Liners

www.oilmangroup.com

Global Reliable Supplier

Spare Parts

Crosshead and guiders

Pulsation Dampener
@5000psi or 7500psi

www.oilmangroup.com

Global Reliable Supplier

Spare Parts

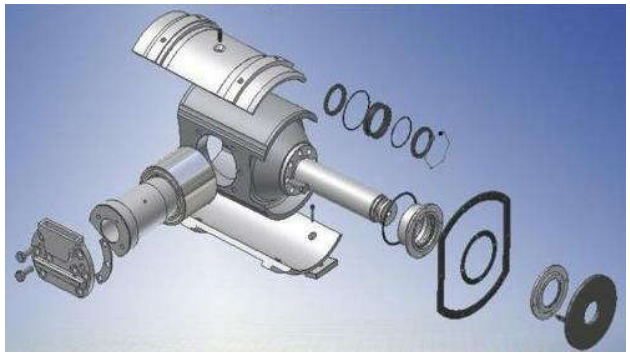

Bullgear, crankshaft, pinion shaft, manifold, extension rod,valve assembly whatever you need, Oilman group can meet timely.

www.oilmangroup.com

Global Reliable
Supplier

THANK YOU!

To be your best cooperator!

sales@oilmangroup.com
www.oilmangroup.com